ISSN 0378 – 6978

Official Journal of the European Communities

L 100

Volume 32

12 April 1989

English edition

Legislation

Contents

I *Acts whose publication is obligatory*

. . . . . .

II *Acts whose publication is not obligatory*

Commission

89/240/EEC:

★ **Commission Directive of 16 December 1988 adapting to technical progress Council Directive 86/663/EEC on the approximation of the laws of the Member States relating to self-propelled industrial trucks** 1

Price: ECU 10,50

Acts whose titles are printed in light type are those relating to day-to-day management of agricultural matters, and are generally valid for a limited period.

The titles of all other Acts are printed in bold type and preceded by an asterisk.

II

(Acts whose publication is not obligatory)

COMMISSION

COMMISSION DIRECTIVE

of 16 December 1988

adapting to technical progress Council Directive 86/663/EEC on the approximation of the laws of the Member States relating to self-propelled industrial trucks

(89/240/EEC)

THE COMMISSION OF THE EUROPEAN COMMUNITIES,

Having regard to the Treaty establishing the European Economic Community,

Having regard to Council Directive 86/663/EEC of 22 December 1986 on the approximation of the laws of the Member States relating to self-propelled industrial trucks [1], and in particular Article 10 thereof,

Whereas Directive 86/663/EEC expressly authorizes the adoption of test examination methods for self-propelled industrial trucks according to the procedure for adaptation to technical progress set out in Article 22 of Council Directive 84/528/EEC of 17 September 1984 on the approximation of the laws of the Member States relating to common provisions for lifting and mechanical handling appliances [2];

Whereas the adoption of these test and examination methods is necessary to ensure the conformity of self-propelled industrial trucks with the technical requirements concerning them in Directive 86/663/EEC;

Whereas the date of implementation of this Directive should be the same as that laid down by Directive 86/663/EEC with a view to achieving the desired objective;

Whereas the provisions of this Directive are in accordance with the opinion of the committee for adaptation to technical progress of the directives aimed at the elimination of technical barriers in the mechanical lifting and handling appliances and equipment sector,

HAS ADOPTED THIS DIRECTIVE:

Article 1

Stability, visibility and functional tests for self-propelled industrial trucks falling within the scope of Directive 86/663/EEC shall be carried out in accordance with the methods set out in the Annex.

Article 2

1. Member States shall bring into force the laws, regulations and administrative provisions necessary to comply with this Directive so that those provisions enter into force on the same date at those taken to comply with Directive 86/663/EEC. They shall fortwith inform the Commission thereof.

2. Member States shall ensure that the texts of the provisions of national law which they adopt in the field governed by this Directive are communicated to the Commission.

Article 3

This Directive is addressed to the Member States.

Done at Brussels, 16 December 1988.

For the Commission
COCKFIELD
Vice-President

---

[1] OJ No L 384, 31. 12. 1986, p. 12.
[2] OJ No L 300, 19. 11. 1984, p. 72.

ANNEX

TEST METHODS FOR SELF-PROPELLED INDUSTRIAL TRUCKS

CONTENTS

Method No	Title	Page
1.	Stability tests for counterbalanced trucks	5
2.	Stability tests for reach and straddle trucks	9
3.	Stability tests for palletstackers and high lift platform trucks	17
4.	Stability tests for high and medium lift order picking trucks	25
5.	Stability tests for single side loading fork lift trucks	34
6.	Stability tests for bi-directional and multi-directional trucks	39
7.	Stability tests for high lift lateral (and front) stacking trucks	47
8.	Stability tests for rough terrain trucks	57
9.	Stability tests for trucks operated with mast tilted forward	61
10.	Stability tests for trucks operating with offset load — offset by powered devices	64
11.	Stability tests for trucks operating with offset load — offset determined by the utilization	67
12.	Functional tests for powered industrial trucks	70
13.	Method of measuring visibility of powered industrial trucks	72

METHOD No 1

STABILITY TESTS FOR COUNTERBALANCED TRUCKS

1. OBJECTIVE AND SCOPE

These requirements specify the basic tests for the verification of stability of counterbalanced trucks (pedestrian and rider controlled) up to and including 10 000 kg rated capacity with tiltable or non-tiltable mast or fork arms. It is applicable to trucks fitted with fork arms and/or attachments, but does not apply to trucks when adapted for use with suspended loads which may swing freely.

2. CONDITIONS OF VALIDITY

The following stability tests in these requirements ensure that the type of truck specified has satisfactory stability when reasonably and appropriately used under normal operating conditions, namely:

(a) operating (travelling and stacking) on substantially smooth, level and prepared surfaces;

(b) travelling with the mast or fork arms tilted backwards and the load in the lowered (travelling) position;

(c) stacking with the mast substantially vertical and the fork arms substantially horizontal;

(d) operating with the load centre of gravity approximately on the longitudinal centre plane of the truck.

Where operating conditions differ from normal, reference shall also be made to methods No 9, No 10 and No 11.

3. CONDITIONS OF TEST

3.1. Equipment and method

Stability shall be verified by means of the tests described hereafter using a test platform which can be tilted about one side.

The truck under test shall be placed on the platform, which is initially in the horizointal plane, sequentially in the positions described in the table of tests. For each of the truck positions, the platform shall be tilted slowly and smoothly to the slope indicated in the table. The truck is considered stable if it passes all the tests without overturning.

For the purpose of these tests, the overturning value of the test platform's slope is that which, if increased, would produce complete overturning of the truck. It is permissible in lateral tests for one of the load wheels to lose contact with the platform, and it is acceptable for parts of the structure or other designed features to make contact with the test platform.

3.2. Condition of the truck

3.2.1. *General*

The tests shall be carried out with the truck ready for use without operator (fuel tanks of engined trucks shall be full if stability is thereby reduced; all other tanks shall be filled to their correct operating levels). The load-carrying means shall be fully equipped with any protective or supplementary lifting apparatus supplied as original equipment, and the mast or fork arms, if adjustable for tilt, shall be positioned in accordance with the table of tests. Where applicable, tyres shall be inflated to the pressures specified by the manufacturer, and where tyre ballast is permitted it shall be used in accordance with the manufacturer's instructions.

3.2.2. *Verification of the vertical position of the mast*

Before starting test No 1 the vertical position of the mast shall be verified by means of a plumb-line or other suitable equipment.

Projection onto the horizontal platform of the centre of gravity G (or any other point such as E having a fixed relationship to G) shall, at the selected test height, by the same as with the load lowered to the normal

travelling height. Deviations caused by deflection shall be corrected by varying the tilt of the mast within the limits imposed by the design of the truck.

This procedure does not apply to trucks where the design does not allow such corrections.

3.2.3. *Lift height for tests simulating travelling*

For tests simulating travelling, the upper face of the fork arms at the heels shall be positioned 300 mm from the ground.

3.2.4. *Lift height for tests simulating stacking*

For tests simulating stacking the lift height shall be measured between the surface of the tilting platform and the upper surface of the fork blade.

3.3. **Effect of the operator's weight on stability**

The operator on rider controlled trucks shall be represented by a weight (mass) of 90 kg if the stability during a test is thereby decreased. For a standing operator, the weight (mass) shall be secured with its centre of gravity 1 000 mm above the centre of the footplate at the control position. For a seated operator, the weight (mass) shall be secured with its centre of gravity 250 mm above the operator's seat in a compressed condition.

3.4. **Location of the truck on the test platform**

The specified position of the truck on the test platform shall be maintained during each test.

Wheel rotation shall be prevented by application of the handbrake, or service brakes, which may be secured in the 'on' position. Additionally, the wheels may be wedged against the truck frame but in such a way that any axle/frame articulation is not affected.

It is permissible to use chocks or blocks between the wheels and the test platform to prevent the truck sliding out of position. The height of the chocks or blocks shall not exceed the values indicated in the following table:

Outside diameter (d) of the wheel	Maximum height of chocks or blocks
Up to 250 mm	25 mm
Over 250 mm	0,1 d

3.5. **Test load**

The test load shall be a weight (mass) equivalent to the rated load Q acting through a centre of gravity G, nominally positioned at he standard load centre distance D, horizontally from the face of the fork arm shank and vertically from the upper face of the fork arm blade (see figure 1).

The centre of gravity G shall be on the centre plane between the mast uprights.

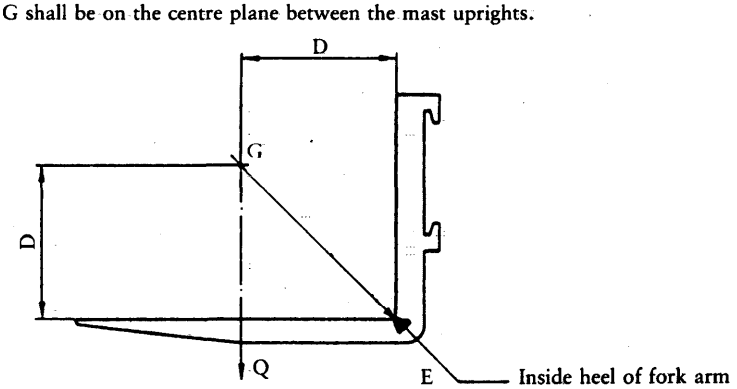

Figure 1

If the manufacturer shows other possible ratings, on the capacity plate tests shall be carried out with maximum load at the corresponding height as well as with the load corresponding to the maximum height.

3.6. **Safety precautions**

Precautions should be taken to prevent the overturning of the truck or the displacement of the test load during the tests.

Where lashings are used to prevent the truck overturning, they shall be sufficiently supple and arranged with sufficient slack so that no appreciable restriction is imposed on the truck until the overturning movement starts.

Displacement of the load may be prevented by means such as:

(a) firmly securing to the load carrier;

(b) suspending near the ground by a rope, chain etc., in such a manner that the upper end of the suspension means acts at the point G where the centre of gravity of a fixed test load would otherwise be located.

4. TEST PROCEDURE

The truck shall be positioned in accordance with the table of tests.

Lateral tests shall be conducted to the side to which the truck is least stable with a line through points MN of the truck parallel to the tilting axis XY of the platform.

Point N is the centre point of the area of contact between the platform surface and the load wheel nearest to the tilting axis XY (figures 7, 8 and 9).

Point M is defined as follows:

(a) For trucks with articulating steering axle (figure 7), M is the vertical projection into the platform of the point of intersection between the centre plane AB of the truck and the centre line of the axle;

(b) For trucks steered with a single or twin swivelling wheel, M is the centre of the area of contact between the platform surface and the steered wheel nearer to the tilting axis XY (figures 8 and 9).

5. TESTS FOR TRUCKS FITTED WITH ATTACHMENTS

Trucks fitted with attachments shall be subjected to the foregoing stability tests, except where the attachment can bring the centre of gravity of the load out of the longitudinal centre plane of the truck (see method No 10).

The test load and its position shall be those specified on the capacity plate(s) of the truck fitted with the attachment and used in compliance with the instructions of the manufacturer.

The lift heights required in the tests shall be measured between the surface of the tilting platform and the underside of the load or attachment, whichever is the smaller.

		Tests for longitudinal stability		Tests for lateral stability	
Test No		1	2	3	4
Test of stability when		Stacking	Travelling	Stacking	Travelling
Test load		With	With	With	Without
Load centre distance		D of test load	D of test load	D of test load	—
Lift height		Maximum (see 3.5)	300 mm	Maximum (see 3.5)	300 mm
Tilt of mast or fork arms		Vertical (see 3.2.2)	Maximum backward tilt	Maximum backward tilt	Maximum backward tilt
Position on test platform		Figures 2 and 6	Figures 3 and 6	Figures 4, 7, 8 and 9	Figures 5, 7, 8 and 9
Test platform slope	up to but excluding 5 000 kg	4 %	18 %	6 %	(15 + 1,4 v) % (1) (maximum 50 %)
	from 5 000 kg up to and including 10 000 kg	3,5 %	18 %	6 %	(15 + 1,4 v) % (1) (maximum 40 %)

(1) v = maximum speed of truck in kilometres per hour, unladen, on smooth and level ground

AB = longitudinal centre plane of truck
MN = truck axis of original tilt
XY = test platform tilt axis

Figure 2

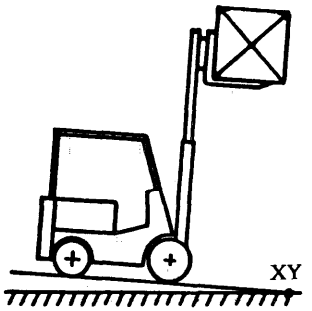

Figure 3

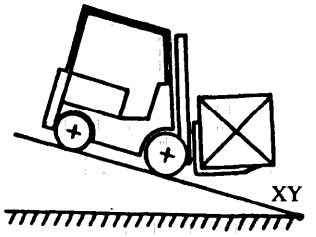

Figure 4

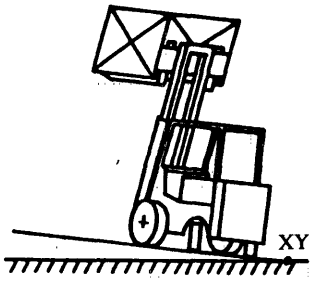

Figure 5

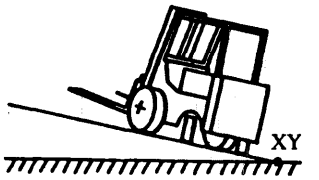

Figure 6

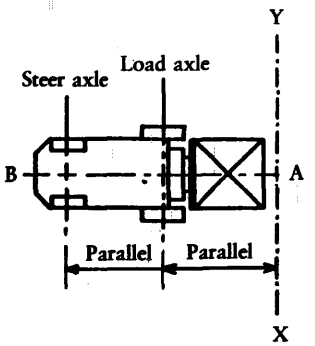

Figure 7

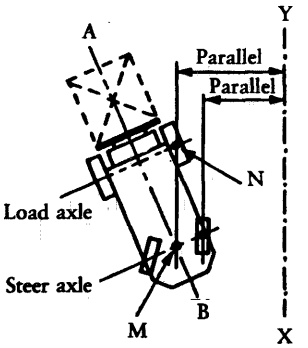

Figure 8

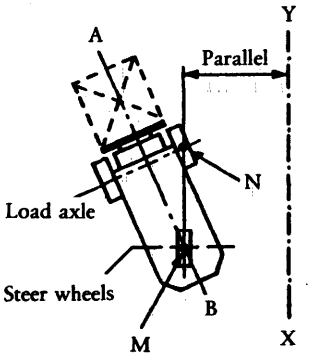

Figure 9

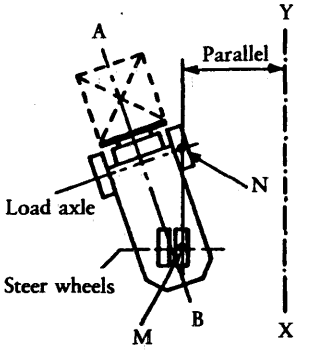

METHOD No 2

STABILITY TESTS FOR REACH AND STRADDLE TRUCKS

1. OBJECTIVE AND SCOPE

These requirements specify the basic tests for the verification of stability of reach and straddle trucks (pedestrian and rider controlled) up to and including 10 000 kg rated capacity with tiltable or non-tiltable mast or fork arms. It is applicable to trucks fitted with fork arms and/or attachments, but does not apply to trucks when adapted for use with suspended loads which may swing freely.

2. CONDITIONS OF VALIDITY

The following stability tests in these requirements ensure that the type of truck specified has satisfactory stability when reasonably and appropriately used under normal operating conditions namely:

(a) operating (travelling and stacking) on substantially smooth, level and prepared surfaces;

(b) travelling with the mast or fork arms tilted backwards and the load in the lowered (travelling) position;

(c) stacking with the mast substantially vertical and the fork arms substantially horizontal;

(d) operating with the load centre of gravity approximately on the longitudinal centre plane of the truck.

Where operating conditions differ from normal, reference shall also be made to methods No 9, No 10 and No 11.

3. CONDITIONS OF TEST

3.1. Equipment and method

Stability shall be verified by means of the tests described hereafter using a test platform which can be tilted about one side.

The truck under test shall be placed on the platform, which is initially in the horizontal plane, sequentially in the positions described in the table of tests. For each of the truck positions, the platform shall be tilted slowly and smoothly to the slope indicated in the table. The truck is considered stable if it passes all the tests without overturning.

For the purpose of these tests, the overturning value of the test platform's slope is that which, if increased, would produce complete overturning of the truck. It is permissible in lateral tests for one of the load wheels to lose contact with the platform, and it is acceptable for parts of the structure or other designed features to make contact with the test platform.

3.2. Condition of the truck

3.2.1. *General*

The tests shall be carried out with the truck ready for use without operator (fuel tanks of engined trucks shall be full if stability is thereby reduced; all other tanks shall be filled to their correct operating levels). The load-carrying means shall be fully equipped with any protective or supplementary lifting apparatus supplied as original equipment, and the mast or fork arms, if adjustable for tilt, shall be positioned in accordance with the table of tests. Where applicable, tyres shall be inflated to the pressures specified by the manufacturer, and where tyre ballast is permitted it shall be used in accordance with the manufacturer's instructions.

3.2.2. *Verification of the vertical position of the mast*

Before starting test No 1 the vertical position of the mast shall be verified by means of a plumb-line or other suitable equipment.

Projection onto the horizontal platform of the centre of gravity G (or any other point such as E having a fixed relationship to G) shall, at the selected test height, by the same as with the load lowered to the normal

travelling height. Deviations caused by deflection shall be corrected by varying the tilt of the mast, or by retracting the mast or fork arms, within the limits imposed by the design of the truck.

This procedure does not apply to trucks where the design does not allow such corrections.

3.2.3. *Lift height for tests simulating travelling*

For tests simulating travelling, the upper face of the fork arms at the heels shall be positioned 300 mm from the ground or at the minimum height for transporting the load whichever is the greater.

3.2.4. *Lift height for tests simulating stacking*

For tests simulating stacking the lift height shall be measured between the surface of the tilting platform and the upper surface of the fork blade.

3.3. **Effect of the operator's weight on stability**

The operator on rider controlled trucks shall be represented by a weight (mass) of 90 kg if the stability during a test is thereby decreased. For a standing operator, the weight (mass) shall be secured with its centre of gravity 1 000 mm above the centre of the footplate at the control position. For a seated operator, the weight (mass) shall be secured with its centre of gravity 250 mm above the operator's seat in a compressed condition.

3.4. **Location of the truck on the test platform**

The specified position of the truck on the test platform shall be maintained during each test.

Wheel rotation shall be prevented by application of the handbrake, or service brakes, which may be secured in the 'on' position. Additionally, the wheels may be wedged against the truck frame but in such a way that any axie/frame articulation is not affected. However, as a safety measure when testing longitudinally with the articulating axie parallel and nearer to the tilt axls of the test platform, the articulation of the axle may be locked/blocked.

It is permissible to use chocks or blocks between the wheels and the test platform to prevent the truck sliding out of position. The height of the chocks or blocks shall not exceed the values indicated in the following table:

Outside diameter (d) of the wheel	Maximum height of chocks or blocks
Up to 250 mm	25 mm
Over 250 mm	0,1 d

3.5. **Test load**

The test load shall be a weight (mass) equivalent to the rated load Q acting through a centre of gravity G, nominally positioned at he standard load centre distance D, horizontally from the face of the fork arm shank and vertically from the upper face of the fork arm blade (see figure 1).

The centre of gravity G shall be on the centre plane between the mast uprights.

Figure 1

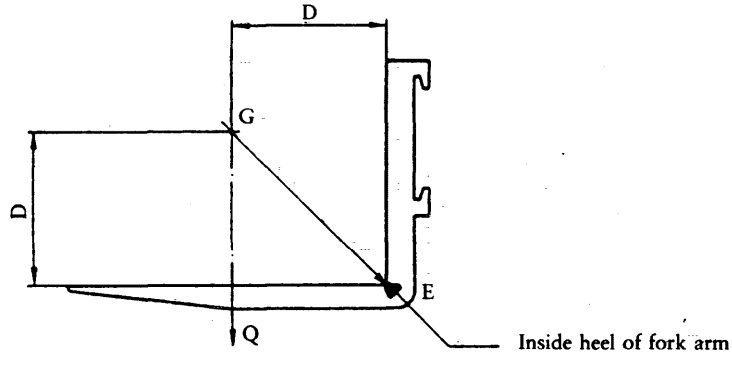

If the manufacturer shows other possible ratings, on the capacity plate tests shall be carried out with maximum load at the corresponding height as well as with the load corresponding to the maximum height.

3.6. **Safety precautions**

Precautions should be taken to prevent the overturning of the truck or the displacement of the test load during the tests.

Where lashings are used to prevent the truck overturning, they shall be sufficiently supple and arranged with sufficient slack so that no appreciable restriction is imposed on the truck until the overturning movement starts.

Displacement of the load may be prevented by means such as:

(a) firmly securing to the load carrier;

(b) suspending near the ground by a rope, chain etc., in such a manner that the upper end of the suspension means acts at the point G where the centre of gravity of a fixed test load would otherwise be located.

4. TEST PROCEDURE

The truck shall be positioned in accordance with the table of tests.

Lateral tests shall be conducted to the side to which the truck is least stable with a line through points MN of the truck parallel to the tilting axis XY of the platform.

Point N is the centre point of the area of contact between the platform surface and the outrigger wheel nearest to the tilting axis XY (figures 8 to 13 inclusive).

Point M is defined as follows:

(a) For trucks with articulating steering axle (figure 9), or privoting single point support steering, M is the vertical projection into the platform of the point of intersection between the centre plane AB of the truck and the centre line of the axle;

(b) Figures 8, 10, 11, 12 and 13 indicate positions for trucks of other designs.

5. TESTS FOR TRUCKS FITTED WITH ATTACHMENTS

Trucks fitted with attachments shall be subjected to the foregoing stability tests, except where the attachment can bring the centre of gravity of the load out of the longitudinal centre plane of the truck (see method No 10).

The test load and its position shall be those specified on the capacity plate(s) of the truck fitted with the attachment and used in compliance with the instructions of the manufacturer.

The lift heights required in the tests shall be measured between the surface of the tilting platform and the underside of the load or attachment, whichever is the smaller.

Tests for longitudinal stability		
Test No	1	2
Test of stability when	Stacking	Travelling
Test load	With	With
Load centre distance	D of test load	D of test load
Lift height	Maximum (see 3.5)	Lowered (see 3.2.3)
Position of carrying device	Extended (for reach trucks)	Retracted
Tilt of mast or fork arms	Vertical (see 3.2.2)	Maximum backward tilt
Position on test platform	Figures 2, 4 and 5	Figures 3, 4 and 5
Test platform slope	4 % up to and excluding 5 000 kg 3,5 % from 5 000 kg included up to 10 000 kg included	18 %
	Figure 2 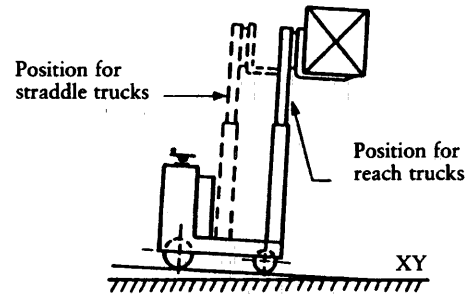	Figure 3 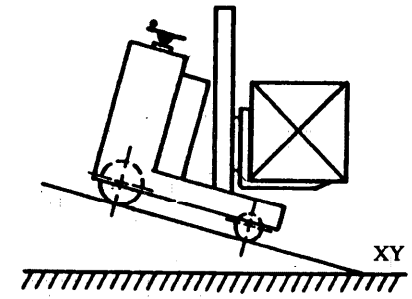
AB = longitudinal centre plane of reach or straddle truck XY = test platform tilt axis	Figures 4 and 5 both apply to tests 1 and 2 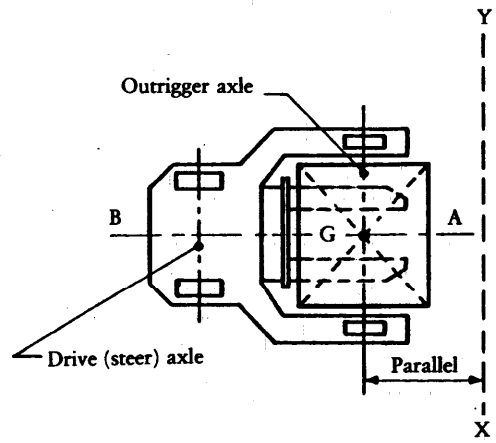 Figure 4	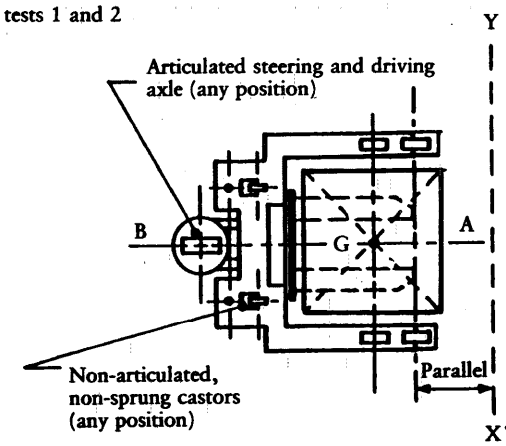 Figure 5

Tests for lateral stability			
Test No	3	3 A	4
Test of stability when	Stacking		Travelling
Test load	With	Without	Without
Load centre distance	D or 400 mm (1)	—	—
Lift height	Maximum (see 3.5)		Lowered (see 3.2.3)
Position of carrying device	Retracted		
Tilt of mast or fork arms	Positioned so that the truck is in the condition of minimum stability		
Position on test platform	Figure 6 (2)		Figure 7 (2)
Test platform slope	6 %	8 %	See figure 18

(1) Nominal distance D or 400 mm if this latter distance corresponds to minimum stability and if the truck has been designed for this distance.

If the truck is designed only for distance D, this shall be mentioned on the load plate.

(2) The positioning of vehicles on the platform for lateral tests depends on the type of truck to be tested (see figures 8 to 13).
The true tip line MN must be parallel to the tilt axis XY of the test platform. The test shall be conducted to the side to which the truck is least stable.

AB = longitudinal centre plane of reach or straddle truck

MN = truck axis of original tilt

XY = test platform tilt axis

Figure 6

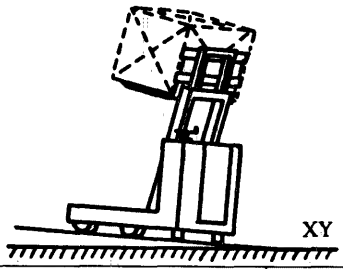

Figure 7

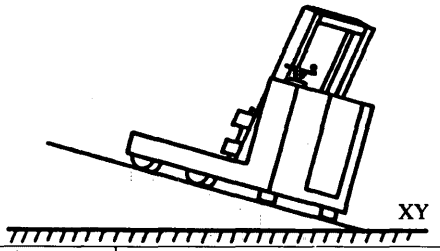

Figure 8

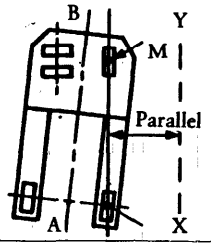

Figure 9

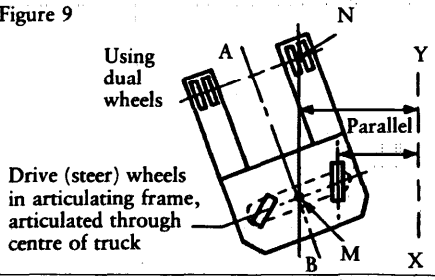

Figure 10

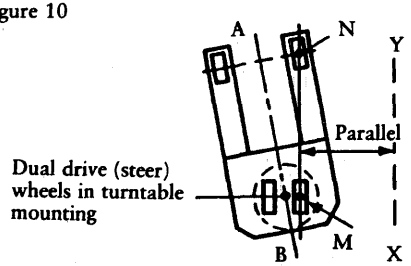

Figure 11

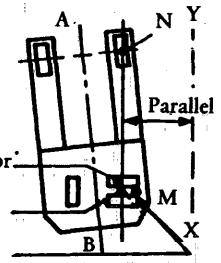

Figure 12

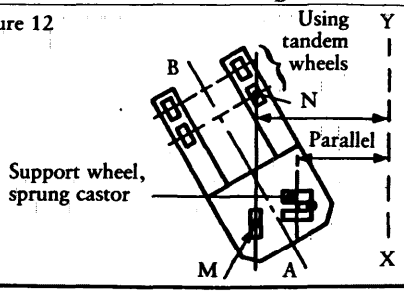

Figure 13

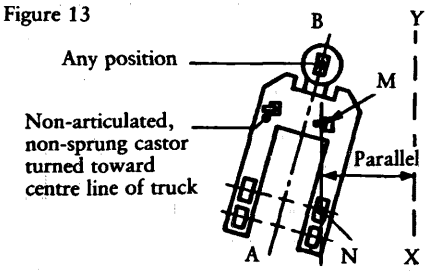

Additional tests for longitudinal stability

Test No	5	5 A	6
Test of stability when	Stacking		Travelling
Test load	With	Without	Without
Load centre distance	D or 400 mm (1)	—	—
Lift height	Maximum (see 3.5)		Lowered (see 3.2.3)
Position of carrying device	Retracted		
Tilt of mast or fork arms	Positioned so that the truck is in the condition of minimum stability		
Position on the platform	Figures 14, 16 and 17		Figures 15, 16 and 17
Tests platform slope	14 %	14 % when one or no brake and 18 % when two brakes are fitted to the wheels at the operator's and of the truck	See figure 19

(1) Nominal distance D or 400 mm if this latter distance corresponds to minimum stability and if the truck has been designed for this distance.
If the truck is designed only for distance D, this shall be mentioned on the load plate.

AB = longitudinal centre plane of reach or straddle truck
MN = truck axls of original tilt
XY = test platform tilt axls

Figure 14

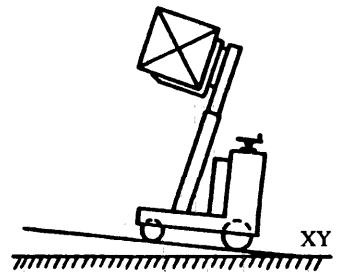

Figure 15

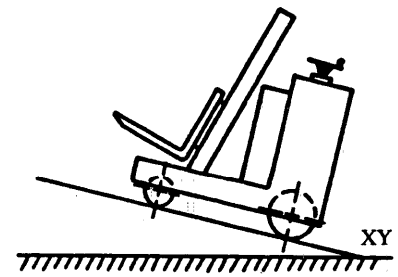

Figures 16 and 17 both apply to tests 5, 5 A and 6.
Every safety precaution shall be taken when tilting toward the driver's side during stability tests. To prevent any danger of overturning at tilting limit, around axis MN or MO, the articulation of the drive (steer) axle may be locked on trucks with centro-articulated axle. (The last phrase applies only to figure 16).

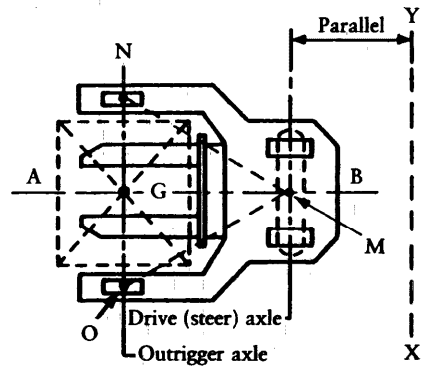

Figure 16

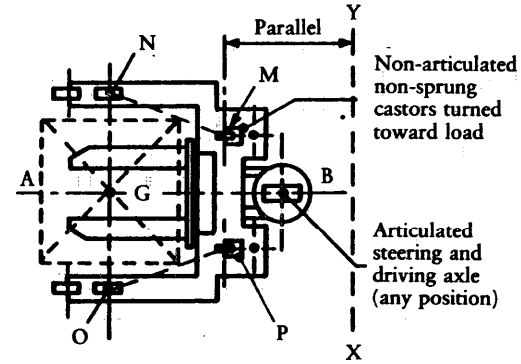

Figure 17

Test No 4

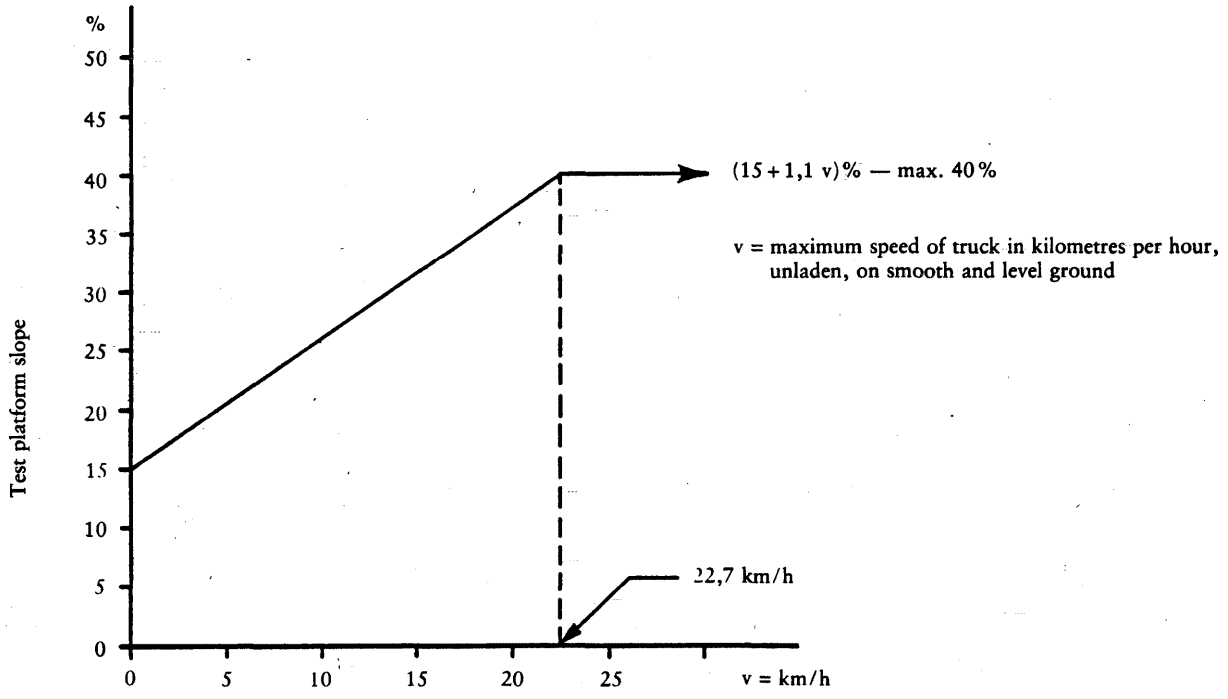

Figure 18

Test No 6

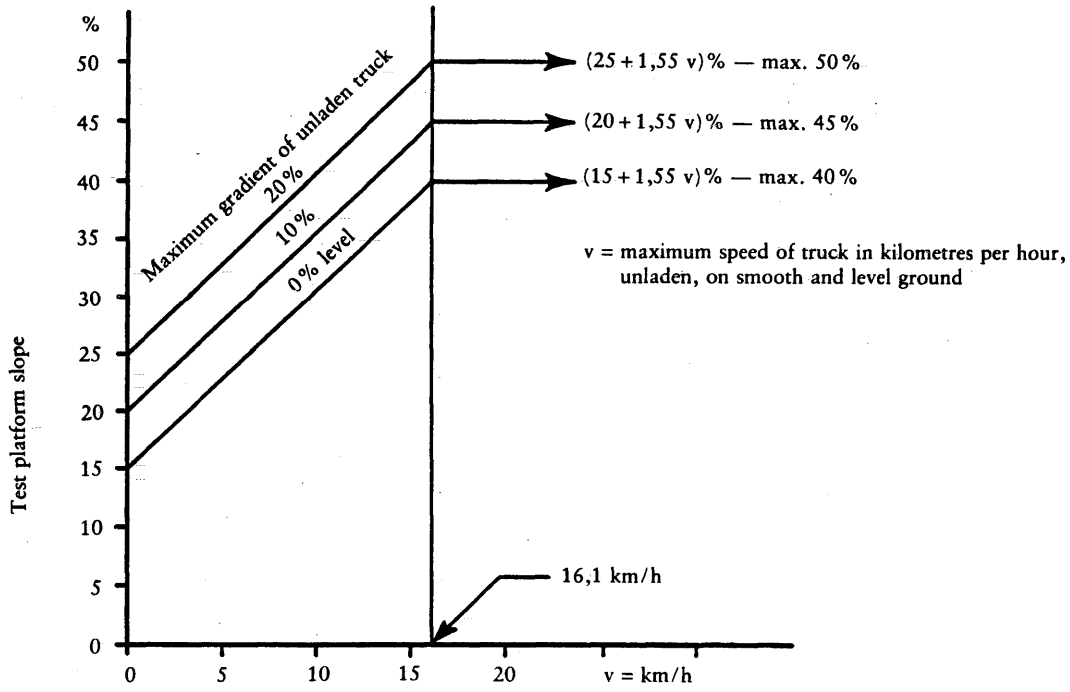

Figure 19

The various values of the gradient in figure 19, or those calculated using the appropriate formula, are applied according to the intended performance of the truck.

Thus, if designed for and intended solely for use on level floors, only the curve marked '0 % level' should be used for determining the slope of the test platform. If designed for and intended for travelling unladen up and down gradients of 10 %, the test platform slope vlaue indicated by the 10 % curve should be used; and similary for the curve marked 20 %.

If designed for and intended for travelling unladen up and down gradients between the above curves, the test platform slope should be calculated using one of the following formulae:

$$\alpha = 15 + 0{,}5\ i + 1{,}55\ v\ (\text{max. } (40 + 0{,}5\ i)\%)$$

where α = test platform slope, expressed as a percentage (%),

i = maximum gradient, expressed as a percentage (%), of the unladen truck,

v = maximum speed of truck in kilometres per hour, unladen, on smooth and level ground.

METHOD No 3

STABILITY TESTS FOR PALLET STACKERS AND HIGH LIFT PLATFORM TRUCKS

1. OBJECTIVE AND SCOPE

These requirements specify the basic tests for the verification of stability of pallet stackers and high lift platform trucks (pedestrian and rider controlled) up to and including 10 000 kg rated capacity with tiltable or non-tiltable mast or fork arms or platform. It is applicable to trucks fitted with fork arms and/or attachments, but does not apply to trucks when adapted for use with suspended loads which may swing freely.

2. CONDITIONS OF VALIDITY

The following stability tests in these requirements ensure that the type of truck specified has satisfactory stability when reasonably and appropriately used under normal operating conditions, namely:

(a) operating (travelling and stacking) on substantially smooth, level and prepared surfaces;

(b) travelling with the mast or fork arms tilted backwards and the load in the lowered (travelling) position;

(c) stacking with the mast substantially vertical and the platform or the fork arms substantially horizontal;

(d) operating with the load centre of gravity approximately on the longitudinal centre plane of the truck.

Where operating conditions differ from normal, reference shall also be made to methods No 9, No 10 and No 11.

3. CONDITIONS OF TEST

3.1. Equipment and method

Stability shall be verified by means of the tests described hereafter using a test platform which can be tilted about one side.

The truck under test shall be placed on the platform, which is initially in the horizontal plane, sequentially in the positions described in the table of tests. For each of the truck positions, the platform shall be tilted slowly and smoothly to the slope indicated in the table. The truck is considered stable if it passes all the tests without overturning.

For the purpose of these tests, the overturning value of the test platform's slope is that which, if increased, would produce complete overturning of the truck. It is permissible in lateral tests for one of the load wheels to lose contact with the platform, and it is acceptable for parts of the structure or other designed features to make contact with the test platform.

3.2. Condition of the truck

3.2.1. *General*

The tests shall be carried out with the truck ready for use without operator (fuel tanks of engined trucks shall be full if stability is thereby reduced; all other tanks shall be filled to their correct operating levels). The load carrying means shall be fully equipped with any protective or supplementary lifting apparatus supplied as original equipment, and the mast, platform or fork arms, if adjustable for tilt, shall be positioned in accordance with the table of tests. Where applicable, tyres shall be inflated to the pressures specified by the manufacturer, and where tyre ballast is permitted it shall be used in accordance with the manufacturer's instructions.

3.2.2. *Verification of the vertical position of the mast*

Before starting test No 1 the vertical position of the mast shall be verified by means of a plumb-line or other suitable equipment.

Projection onto the horizontal platform of the centre of gravity G (or any other point such as E having a fixed relationship to G) shall, at the selected test height, by the same as with the load lowered to the normal

travelling height. Deviations caused by deflection shall be corrected by varying the tilt of the mast within the limits imposed by the design of the truck.

This procedure does not apply to trucks where the design does not allow such corrections.

3.2.3. *Lift height for tests simulating travelling*

For tests simulating travelling, the upper face of the fork arms at the heels shall be positioned 300 mm from the ground or at the mimimum height for transporting the load, whichever is the greater.

3.2.4. *Lift height for tests simulating stacking*

For tests simulating stacking the lift height shall be measured between the surface of the tilting platform and the upper surface of the fork blade.

3.3. **Effect of the operator's weight on stability**

The operator on rider controlled trucks shall be represented by a weight (mass) of 90 kg if the stability during a test is thereby decreased. For a standing operator, the weight (mass) shall be secured with its centre of gravity 1 000 mm above the centre of the footplate at the control position. For a seated operator, the weight (mass) shall be secured with its centre of gravity 250 mm above the operator's seat in a compressed condition.

3.4. **Location of the truck on the test platform**

The specified position of the truck on the test platform shall be maintained during each test.

Wheel rotation shall be prevented by application of the handbrake, or service brakes, which may be secured in the 'on' position. Additionally, the wheels may be wedged against the truck frame but in such a way that any axle/frame articulation is not affected. However, as a safety measure when testing longitudinally with the articulating axle parallel and nearer to the tilt axis of the test platform, the articulation of the axle may be locked/blocked.

It is permissible to use chocks or blocks between the wheels and the test platform to prevent the truck sliding out of position. The height of the chocks or blocks shall not exceed the values indicated in the following table:

Outside diameter (d) of the wheel	Maximum height of chocks or blocks
Up to 250 mm	25 mm
Over 250 mm	0,1 d

3.5. **Test load**

The test load shall be a weight (mass) equivalent to the rated load Q acting through a centre of gravity G, nominally positioned at the standard load centre distance D, horizontally from the face of the fork arm shank and vertically from the upper face of the fork arm blade (see figure 1).

The centre of gravity G shall be on the centre plane between the mast uprights.

Figure 1

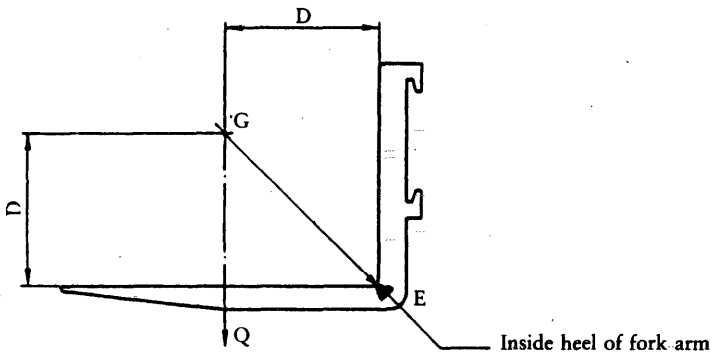

If the manufacturer shows other possible ratings, on the capacity plate tests shall be carried out with maximum load at the corresponding height as well as with the load corresponding to the maximum height.

3.6. **Safety precautions**

Precautions should be taken to prevent the overturning of the truck or the displacement of the test load during the tests.

Where lashings are used to prevent the truck overturning, they shall be sufficiently supple and arranged with sufficient slack so that no appreciable restriction is imposed on the truck until the overturning movement starts.

Displacement of the load may be prevented by means such as:

(a) firmly securing to the load carrier;

(b) suspending near the ground by a rope, chain etc., in such a manner that the upper end of the suspension means acts at the point G where the centre of gravity of a fixed test load would otherwise be located.

4. TEST PROCEDURE

The truck shall be positioned in accordance with the table of tests.

Lateral tests shall be conducted to the side to which the truck is least stable with a line through points MN of the truck parallel to the tilting axis XY of the platform.

Point N is the centre point of the area of contact between the platform surface and the outrigger wheel nearest to the tilting axis XY (figures 8 to 13 inclusive).

Point M is defined as follows:

(a) For trucks with articulating steering axle (figure 9) or pivoting single point support steering, M is the vertical projection into the platform of the point of intersection between the centre plane AB of the truck and the centre line of the axle;

(b) Figures 8, 10, 11, 12 and 13 indicate positions for trucks of other designs.

5. TESTS FOR TRUCKS FITTED WITH ATTACHMENTS

Trucks fitted with attachments shall be subjected to the foregoing stability tests, except where the attachment can bring the centre of gravity of the load out of the longitudinal centre plane of the truck (see method No 10).

The test load and its position shall be those specified on the capacity plate(s) of the truck fitted with the attachment and used in compliance with the instructions of the manufacturer.

The lift heights required in the tests shall be measured between the surface of the tilting platform and the underside of the load or attachment, whichever is the smaller.

Tests for longitudinal stability

Test No	1		2
Test of stability when	Stacking		Travelling
Test load	With		With
Load centre distance	D of test load		D of test load
Lift height	Maximum (see 3.5)		Lowered (see 3.2.3 and note (1))
Tilt of mast or fork arms	Vertical (see 3.2.2)		Maximum backward tilt
Position on test platform	Figures 2, 4 and 5		Figures 3, 4 and 5
Test platform slope	4 % up to and excluding 5 000 kg	3,5 % from 5 000 kg included up to 10 000 kg included	18 %

(1) When the outrigger legs can be raised relative to the ground, tests 2, 4 and 6 shall be carried out with the outriggers in the raised position.

AB = longitudinal centre plane of truck

XY = test platform tilt axis

Figure 2

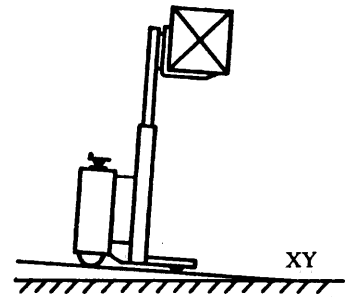

Figure 3

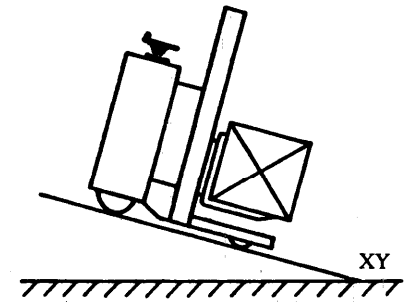

Figures 4 and 5 both apply to tests 1 and 2

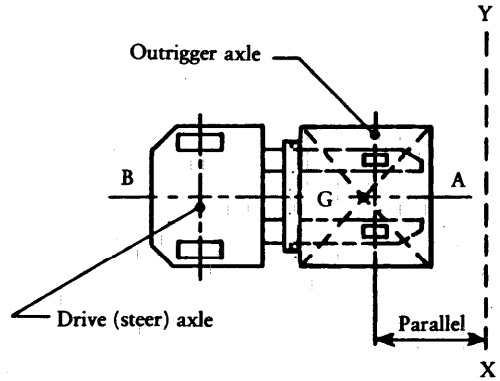

Figure 4

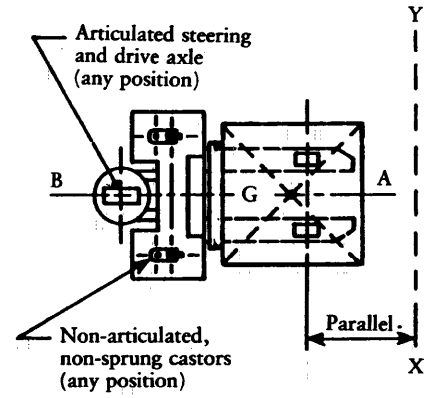

Figure 5

Test for lateral stability

Test No	3	4
Test of stability when	Stacking	Travelling
Test load	With	Without
Load centre distance	D or 400 mm (1)	—
Lift height	Maximum (see 3.5)	Lowered (see 3.2.3) and note (2)
Tilt of mast or fork arms	Positioned so that the truck is in the condition of minimum stability	
Position on test platform	Figure 6 (3)	Figure 7 (3)
Test platform slope	See figure 18 and note (4)	See figure 19

(1) Nominal distance D or 400 mm if this latter distance corresponds to minimum stability and if the truck has been designed for this distance.
If the truck is designed only for distance D, this shall be mentioned on the load plate.

(2) When the outrigger legs can be raised relative to the ground, tests 2, 4 and 6 shall be carried out with the outriggers in the raised position.

(3) The positioning of vehicles on the platform for lateral tests depends on the type of truck to be tested (see figures 8 to 13). The true tip line MN must be parallel to the tilt axis XY of the test platform. The test shall be conducted to the side to which the truck is least stable.

(4) If the truck is equipped with a device which automatically limits the travel speed when the fork arms are elevated, this reduced speed shall be used to determine the platform tilt.

AB = longitudinal centre plane of truck
MN = truck axis of original tilt
XY = test platform tilt axis

Figure 6

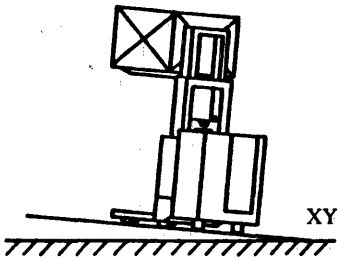

Figure 7

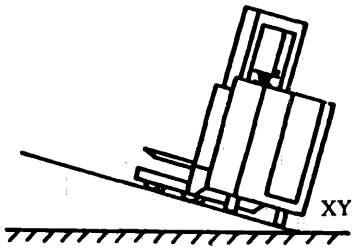

Figure 8

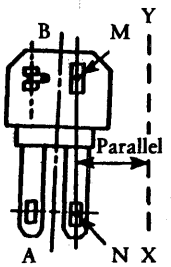

Figure 9

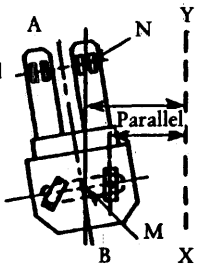

Figure 10

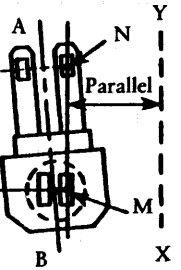

Figure 11

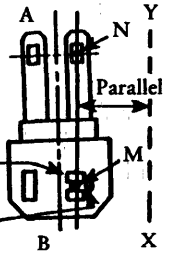

Figure 12

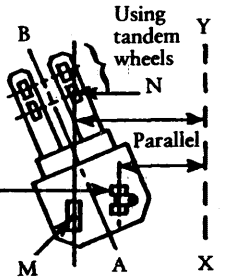

Figure 13

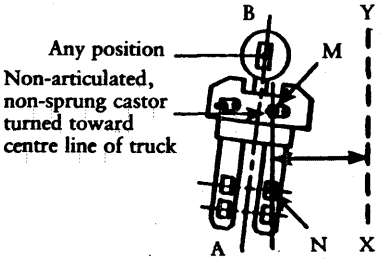

Additional tests for longitudinal stability		
Test No	5	6
Test of stability when	Stacking	Travelling
Test load	With	Without
Load centre distance	D or 400 mm (1)	—
Lift height	Maximum (see 3.5)	Lowered (see 3.2.3) and note (2)
Tilt of mast or fork arms	Positioned so that the truck is in the condition of minimum stability	
Position on test platform	Figures 14, 16 und 17	Figures 15, 16 und 17
Test platform slope	10 %	See figure 20

(1) Nominal distance D or 400 mm if this latter distance corresponds to minimum stability and if the truck has been designed for this distance.
If the truck is designed only for distance D, this shall be mentioned on the load plate.

(2) When the outrigger legs can be raised relative to the ground, tests 2, 4 and 6 shall be carried out with the outriggers in the raised position.

Figure 14

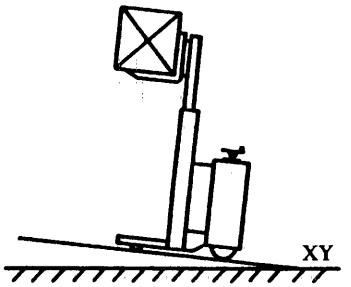

Figure 15

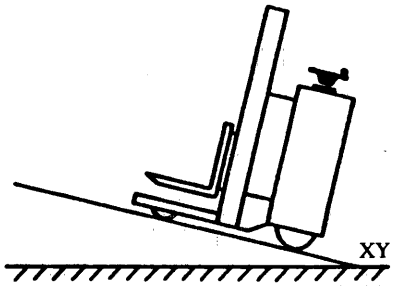

Figures 16 and 17 both apply to tests 5 and 6. Every safety precaution shall be taken when tilting toward the driver's side during stability tests. To prevent any danger of overturning at tilting limit, around axis MN or MO, the articulation of the drive (steer) axle may be locked on trucks with centro-articulated axle. (The last sentence applies only to figure 16)

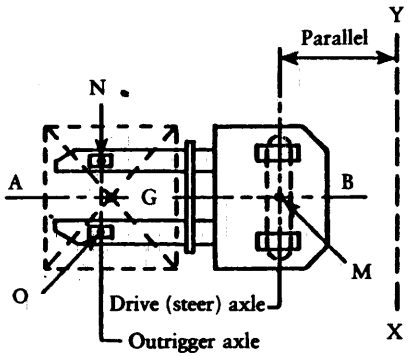

Figure 16

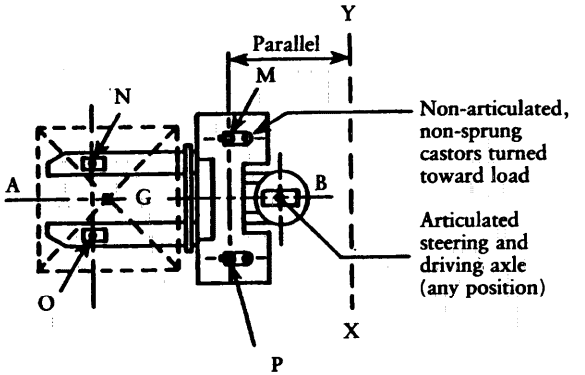

Figure 17

AB = longitudinal centre plane of truck
MN = truck axis of original tilt
XY = test platform tilt axis

Test No 3

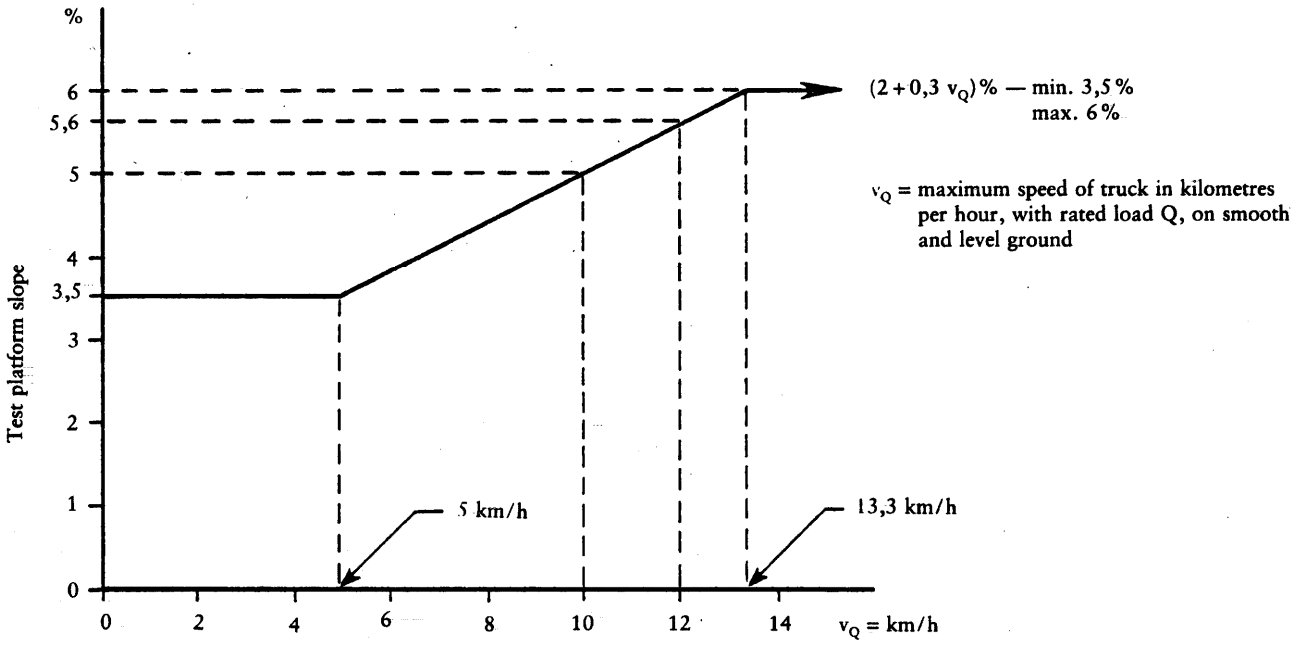

Figure 18

Test No 4

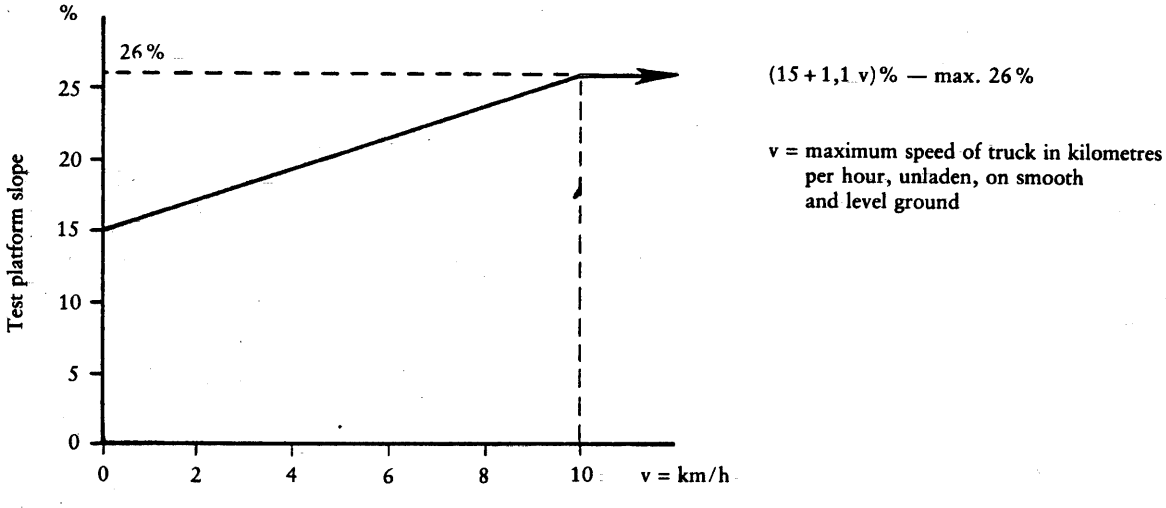

Figure 19

Test No 6

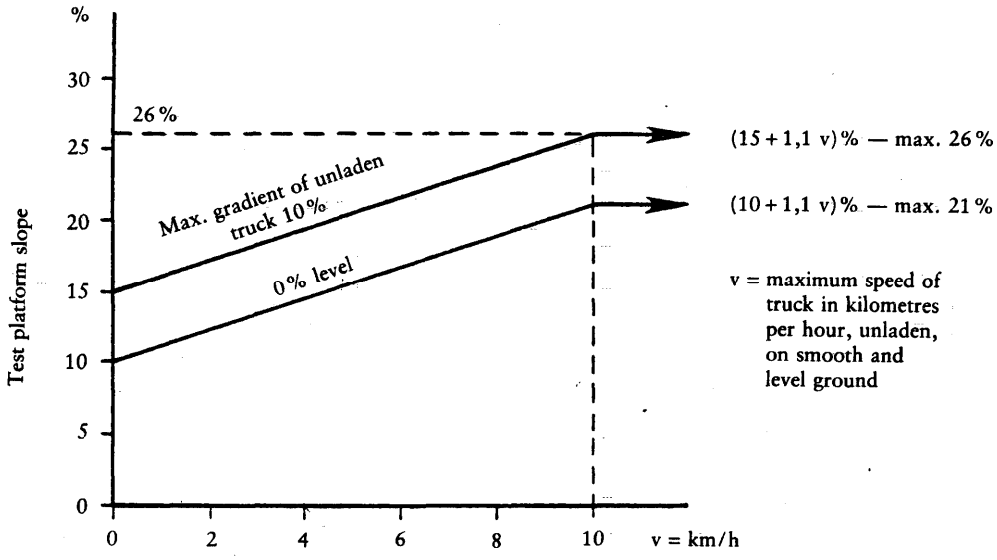

Figure 20

The various values of the gradient in figure 20, or those calculated using the appropriate formula, are applied according to the intended performance of the truck.

Thus, if designed for and intended solely for use on level floors, only the curve marked '0 % level' should be used for determining the slope of the test platform. If designed for and intended for travelling unladen up and down gradients of 10 %, the test platform slope value indicated by the '10 %' curve should be used.

If designed for and intended for travelling up and down gradients between the above curves, the test platform slope should be calculated using one of the following formulae:

$$\alpha = 10 + 0{,}5\ i + 1{,}1\ v\ (\text{max. } 21 + 0{,}5\ \%)$$

where α = test platform slope, expressed as a percentage (%),

i = maximum gradient, expressed as a percentage (%) of the unladen truck,

v = maximum speed of truck in kilometres per hour, unladen, on smooth and level ground.

METHOD No 4

STABILITY TESTS FOR HIGH AND MEDIUM LIFT ORDER PICKING TRUCKS

1. OBJECTIVE AND SCOPE

These requirements specify the basic tests for the verification of stability of high and medium lift order picking trucks up to and including 10 000 kg rated capacity. These requirements apply to trucks fitted with fork arms or platforms. They do not apply to trucks fitted with a load carrier that can be shifted laterally or pivoted out of the longitudinal centre plane of the truck nor when handling suspended loads, which may swing freely.

2. CONDITIONS OF VALIDITY

These requirements apply to power-operated high and medium lift order picking trucks where the operator's position can be raised to elevations greater than 1 200 mm with or on the load carrier. They may be designed to be guided, free ranging, or both.

When guided (1), these requirements apply to trucks:

(a) that are not restrained from overturning by external means;

(b) that are partly restrained from overturning by external means

and

(c) operating with the load centre of gravity approximately on the longitudinal centre plane of the truck.

Truck types in (b) shall be tested to these requirements to verify the stability in those modes in which they are not restrained.

Order picking trucks, when guided, may have the operator's position and/or the load carrier re-positioned or operated whilst travelling, provided the appropriate conditions and safety requirements (1) and the stability requirements are fully satisfied.

The following stability tests ensure that the type of truck specified has satisfactory stability when reasonably and appropriately used under normal operating conditions (1).

When the truck is used under conditions differing from normal reference shall also be made to methods No 9, No 10 and No 11.

2.1. Normal operating conditions

2.1.1. *Normal operation guided within aisles*

Guided operation is considered normal if a truck is:

(a) operated with the load or load carrier at a height at which traction speed is not restricted below the maximum for which the truck is capable;

(b) operated with the load or load carrier elevated up to a height at which traction of the truck is still allowed, possibly at reduced speed and with correspondingly reduced braking;

(c) operated when picking, placing, stacking or retrieving at any height up to the maximum. Traction at these heights may be totally inhibited or limited to creep speed (1).

2.1.2. *Normal operation when free ranging (unguided)*

Free ranging operation is considered normal if a truck is:

(a) operated at speeds up to V_0 (2) with the load or load carrier lowered (500 mm maximum). The drawbar drag F (3) exerted by the brakes, if not at conventional level, shall either be restored to the level associated with conventional trucks or the speed V_0 shall be automatically restricted to not more than 9 km/h (5,6 mile/h)

(1) For details of definitions and safety rules see Annex 1, Chapter 10, 'Special requirements' of Directive 86/663/EEC.

(2) V_0 = maximum speed of the truck attainable outside the aisle in km/h or mile/h (this may be automatically reduced from V which is the maximum speed of the truck in the operating aisles).

(3) F = drawbar drag exerted by the brakes, or tractive effort expressed as a percentage of the gross weight (mass) of the truck, with or without load, as applicable.

or

(b) operated at speeds not more than 4 km/h (2,5 mile/h) with the load or load carrier elevated over 500 mm but not more than 2,5 m, with the steering in the substantially straight ahead position. Traction other than at creep speed shall be automatically prevented when the steering departs from the substantially straight ahead position

or

(c) used for picking, placing, stacking or retrieving up to a lift height authorized by the manufacturer. Traction shall be limited to creep speed.

3. CONDITIONS OF TEST

3.1. Equipment and method

Stability shall be verified by means of the tests described hereafter using a test platform which can be tilted about one side.

The truck under test shall be placed on the platform, which is initially in the horizontal plane, sequentially in the positions described in the table of tests. For each of the truck positions, the platform shall be tilted slowly and smoothly to the slope indicated in the table. The truck is considered stable if it passes all the tests without overturning.

For the purpose of these tests, the overturning value of the test platform's slope is that which, if increased, would produce complete overturning of the truck. It is permissible in lateral tests for one of the load wheels to lose contact with the platform, and it is acceptable for parts of the structure or other designed features to make contact with the test platform.

3.2. Condition of the truck

3.2.1. *General*

The tests shall be carried out with the truck ready for use without operator (fuel tanks of engined trucks shall be full if stability is thereby reduced; all other tanks shall be filled to their correct operating levels). The load carrying means shall be fully equipped with any protective or supplementary lifting apparatus supplied as original equipment. Where applicable, tyres shall be inflated to the pressures specified by the manufacturer, and where tyre ballast is permitted it shall be used in accordance with the manufacturer's instructions.

3.2.2. *Lift height for tests simulating travelling*

For tests simulating travelling, the upper face of the load platform or fork arms at the heels shall be positioned in accordance with the safety features embodied and the mode of travel being simulated.

3.2.3. *Lift height for tests simulating stacking*

For tests simulating stacking the lift height shall be measured between the surface of the tilting platform and the upper surface of the fork blade.

3.3. Effect of the operator's weight on stability

The operator shall be represented by a weight (mass) of 90 kg if the stability during a test is thereby decreased. For a standing operator, the weight (mass) shall be secured with its centre of gravity 1 000 mm above the centre of the footplate at the control position. For a seated operator, the weight (mass) shall be secured with its centre of gravity 250 mm above the operator's seat in a compressed condition.

3.4. Location of the truck on the test platform

The specified position of the truck on the test platform shall be maintained during each test.

Wheel rotation shall be prevented by application of the handbrake, or service brakes, which may be secured in the 'on' position. Additionally, the wheels may be wedged against the truck frame but in such a way that any axle/frame articulation is not affected. However, as a safety measure when testing longitudinally with the articulating axle parallel and nearer to the tilt axis of the test platform, the articulation of the axle may be locked/blocked.

It is permissible to use chocks or blocks between the wheels and the test platform to prevent the truck sliding out of position. The height of the chocks or blocks shall not exceed the values indicated in the following table:

Outside diameter (d) of the wheel	Maximum height of chocks
Up to 250 mm	25 mm
Over 250 mm	0,1 d

3.5. **Test load**

The test load shall be a weight (mass) equivalent to the rated load Q acting through a centre of gravity G, nominally positioned at the standard load centre distance D, horizontally from the front face of the fork arm shank and vertically from the upper face of the fork arm blade (see figure 1).

The centre of gravity G shall be on the centre plane between the mast uprights.

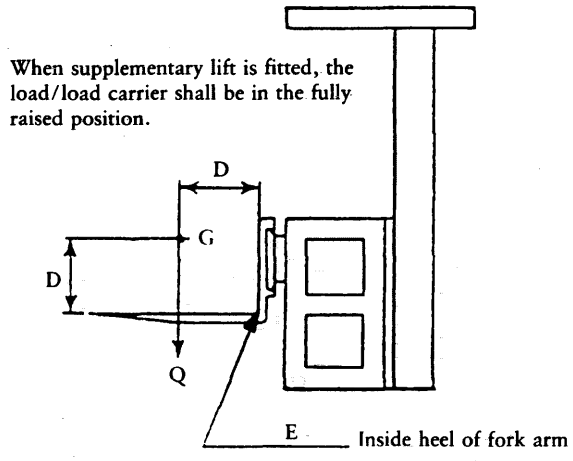

Figure 1

If the manufacturer shows other possible ratings, on the capacity plate tests shall be carried out with maximum load at the corresponding height as well as with the load corresponding to the maximum height.

3.6. **Safety precautions**

Precautions should be taken to prevent the overturning of the truck or the displacement of the test load during the tests.

Where lashings are used to prevent the truck overturning, they shall be sufficiently supple and arranged with sufficient slack so that no appreciable restriction is imposed on the truck until the overturning movement starts.

Displacement of the test load may be prevented by means such as:

(a) firmly securing to the load carrier;

(b) suspending near the ground by a rope, chain etc., in such a manner that the upper end of the suspension means acts at the point G where the centre of gravity of a fixed test load would otherwise be located.

4. TEST PROCEDURE

The truck shall be positioned generally in accordance with the table of tests.

Lateral tests shall be conducted to the side to which the truck is least stable with a line through points MN of the truck parallel to the tilting axis XY of the platform.

The truck wheel positions and general truck configurations in the diagrams are representative only and other arrangements are permissible provided the general principles relating to the test position are maintained.

Tests for longitudinal stability when operating guided within the aisles

Test No	1	2
Test of stability when	Travelling	Travelling
Test load	With	Without
Load centre distance	D of test load	—
Lift height	Maximum for unrestricted travelling (see 2.1.1 a)	Maximum for unrestricted travelling (see 2.1.1 a)
Position on test platform	Figures 2 and 3 or 5 and 6 (position of least stability)	Figures 4 and 3 or 7 and 6 (position of least stability)
Test platform slope	When H ≤ 500 mm and V max > 9 km/h: slope = 18 % When H ≤ 500 mm and V max ≤ 9 km/h: slope = 1,3 F % When H > 500 mm: slope = 1,3 F % (1)	See figure 32

(1) F = drawbar drag exerted by the brakes, or tractive effort expressed as a percentage of the gross weight (mass) of the truck, with or without load, as applicable.

AB = longitudinal centre plane of truck
XY = test platform tilt axis

Figure 2

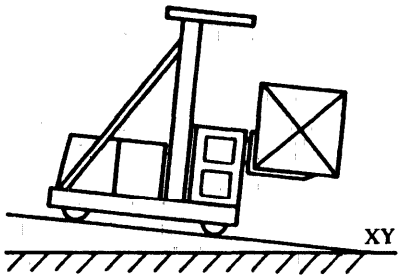

Figure 3

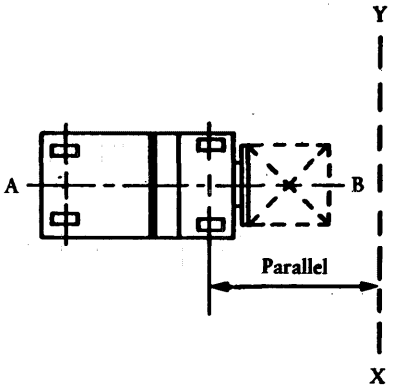

Figure 4

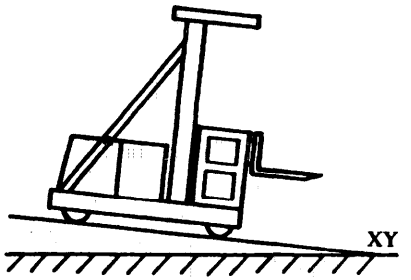

Figure 5

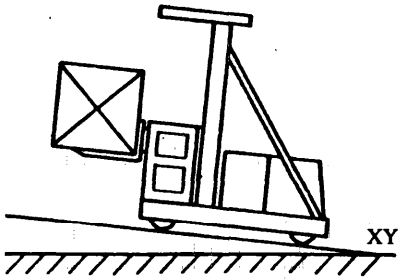

Figure 6

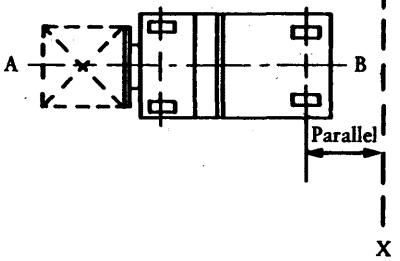

Figure 7

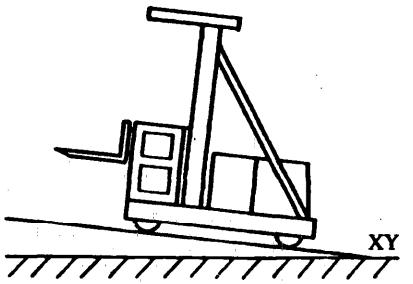

Tests for longitudinal stability when operating guided within the aisles			
Test No	3	4	5
Test of stability when	Travelling	Travelling	Travelling
Test load	With	With	Without
Load centre distance	D of test load	D of test load	—
Lift height	Maximum for travelling (see 2.1.1 b)	Maximum for travelling (see 2.1.1 b)	Maximum for travelling (see 2.1.1 b)
Position on test platform	Figures 8 and 3	Figures 9 and 6	Figures 10 and 3 or 11 and 6 (position of least stability)
Test platform slope	1,3 F % (1)	1,3 F % (1)	1,3 F (unladen) % (1)

(1) F = drawbar drag exerted by the brakes, or tractive effort expressed as a percentage of the gross weight (mass) of the truck, with or without load, as applicable.

XY = test platform tilt axis

Figure 8

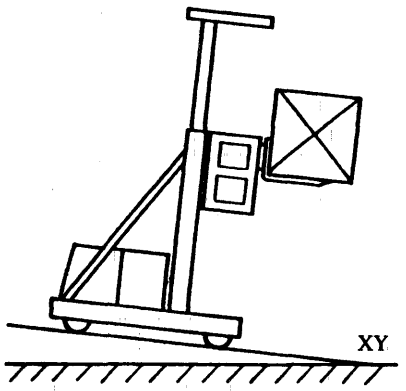

Figure 9

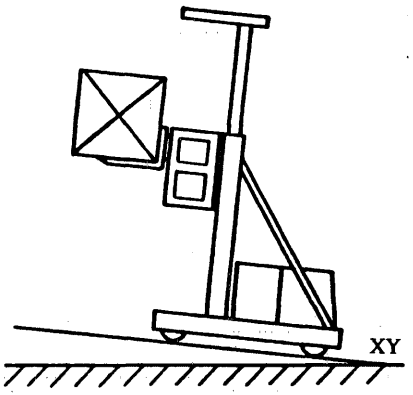

Figure 10

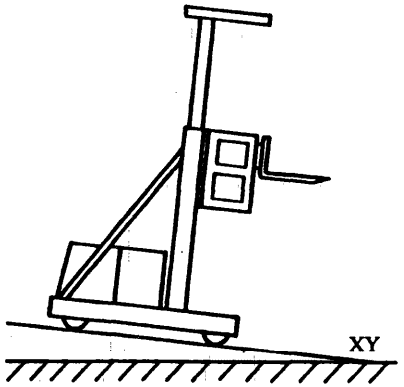

Figure 11

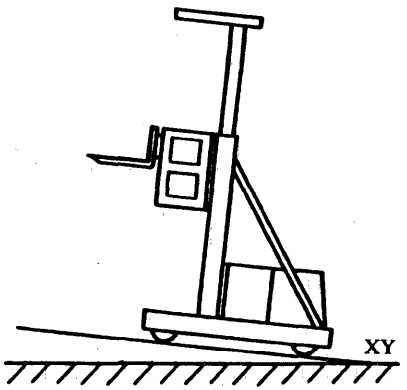

Tests for stability when operating guided within the aisles			
Test No	6		
Test of stability when	Picking/Placing or Stacking/Retrieving		
Test load	With		
Load centre distance	D of test load		
Lift height	Maximum (see 2.1.1 c)		
Position on test platform	Figures 12 and 3, 13 and 16, 14 and 17 or 15 and 6 (position of least stability)		
Test platform slope	4% when traction at maximum height is totally inhibited 6% when traction at maximum height is not totally inhibited		
AB = longitudinal centre line of truck XY = test platform tilt axis	Figure 12 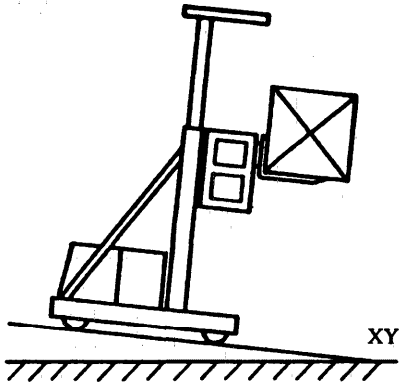	Figure 13 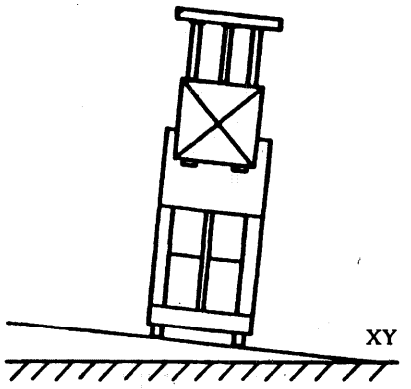	Figure 14 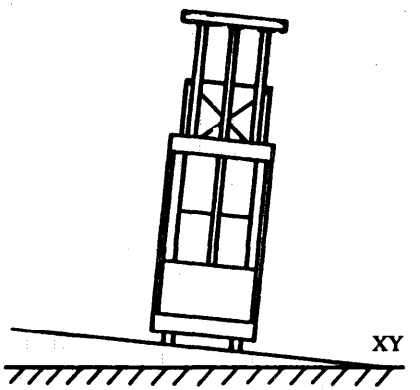
	Figure 15 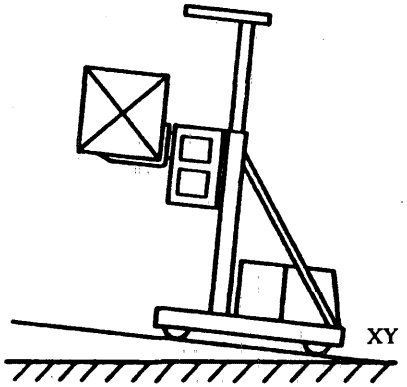	Figure 16 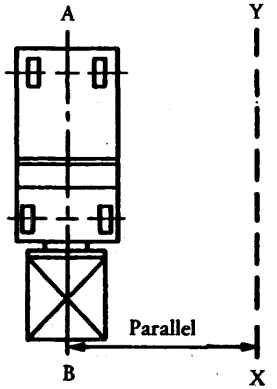	Figure 17 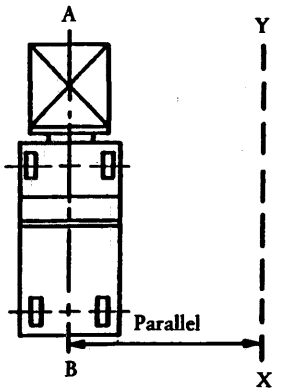

Tests for lateral stability when operating free ranging (unguided)			
Test No	7	8	9
Test of stability when	Picking/Placing or Stacking/Retrieving	Picking/Placing or Stacking/Retrieving	Turning
Test load	With	Without	With or Without (condition of least stability)
Load centre distance	D of test load	—	D of test load
Lift height	Maximum see (2.1.2 c)	Maximum see (2.1.2 c)	Maximum see (2.1.2 a)
Position on test platform	Figures 18 or 21 and 24 to 31, as applicable (position of least stability)	Figures 19 or 22 and 24 to 31, as applicable (position of least stability)	Figures 20 or 23 to 24 to 31, as applicable (position of least stability)
Test platform slope	6 %	8 %	See figure 33
XY = test platform tilt axis	Figure 18 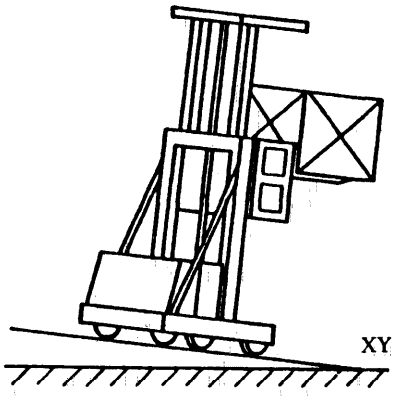	Figure 19 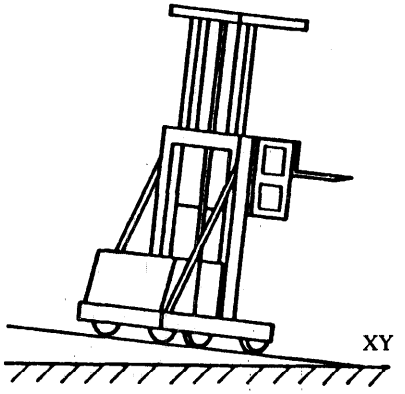	Figure 20 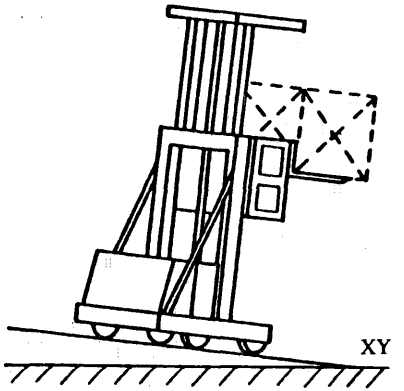
	Figure 21 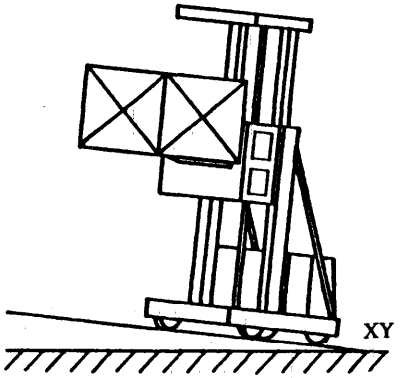	Figure 22 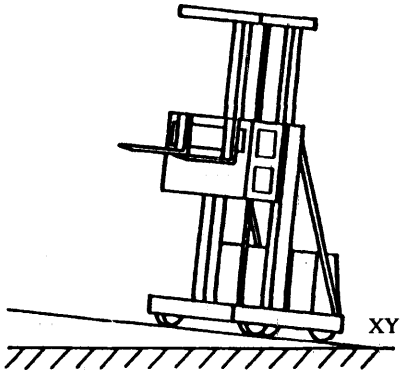	Figure 23 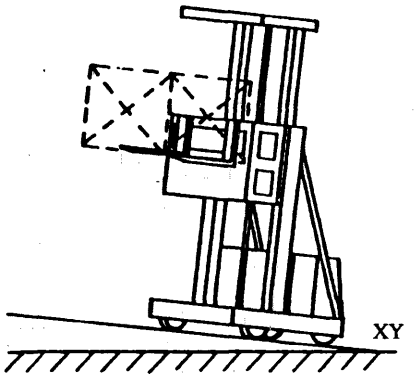

Position of truck on platform for tests 7, 8 and 9

Figure 24

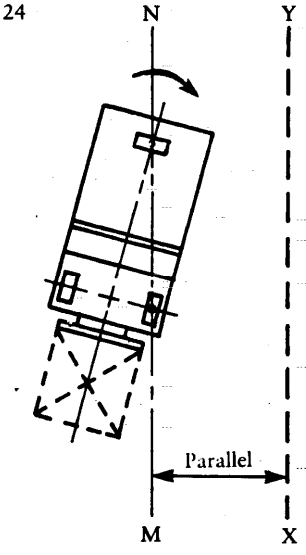

Figure 25

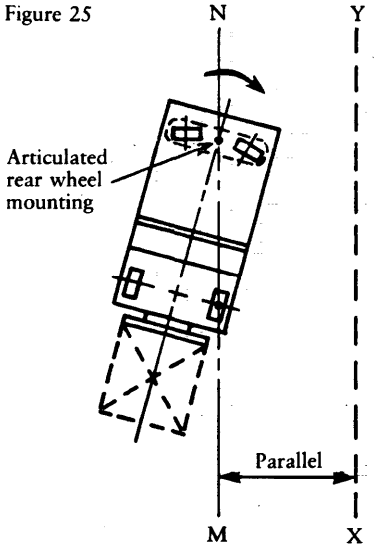

Figure 26

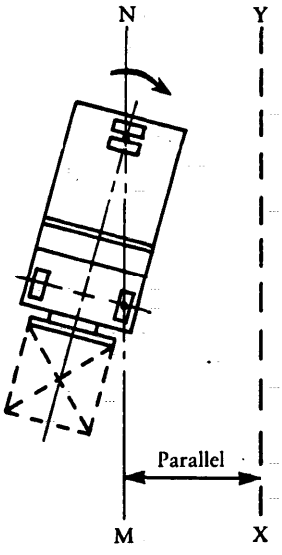

Figure 27

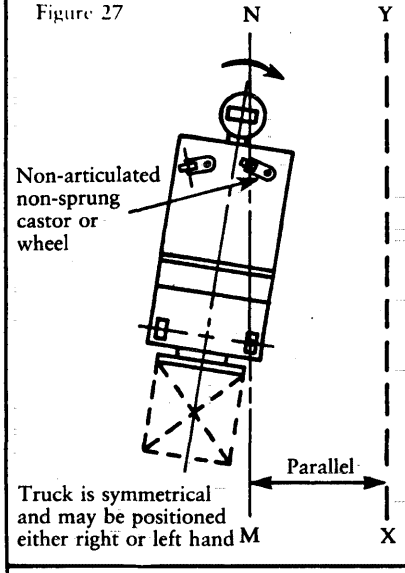

Figure 28

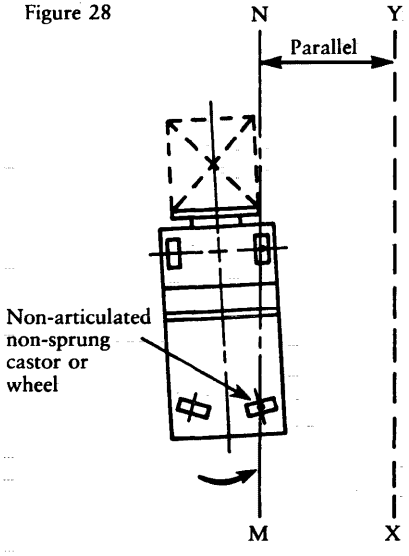

Figure 29

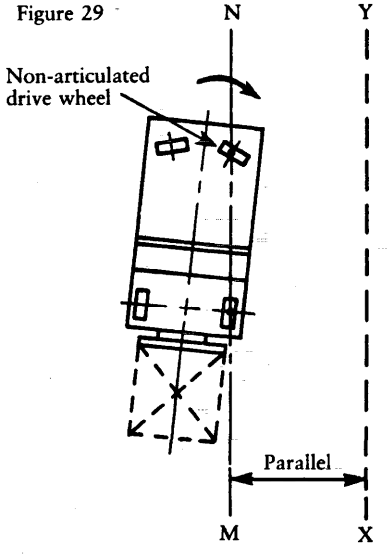

Figure 30

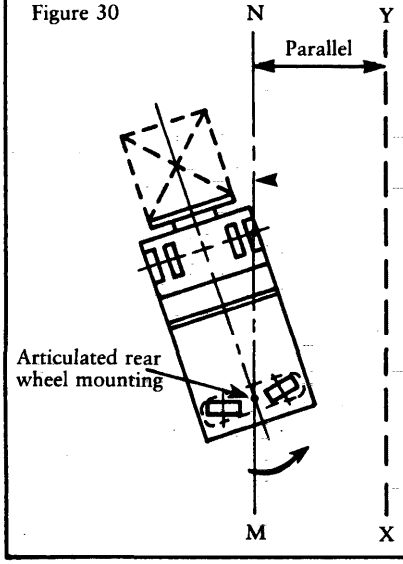

MN = truck axis of original tilt
XY = test platform tilt axis
Arrow = motion represented

Note

The truck wheel positions and general truck configurations in the diagrams are representative only and other arrangements are permissible provided the general principles relating to the test position are maintained.

Figure 31

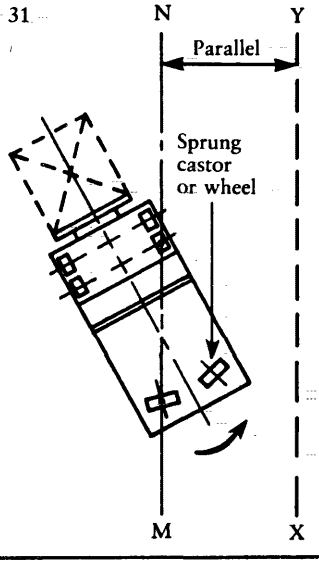

Test No 2

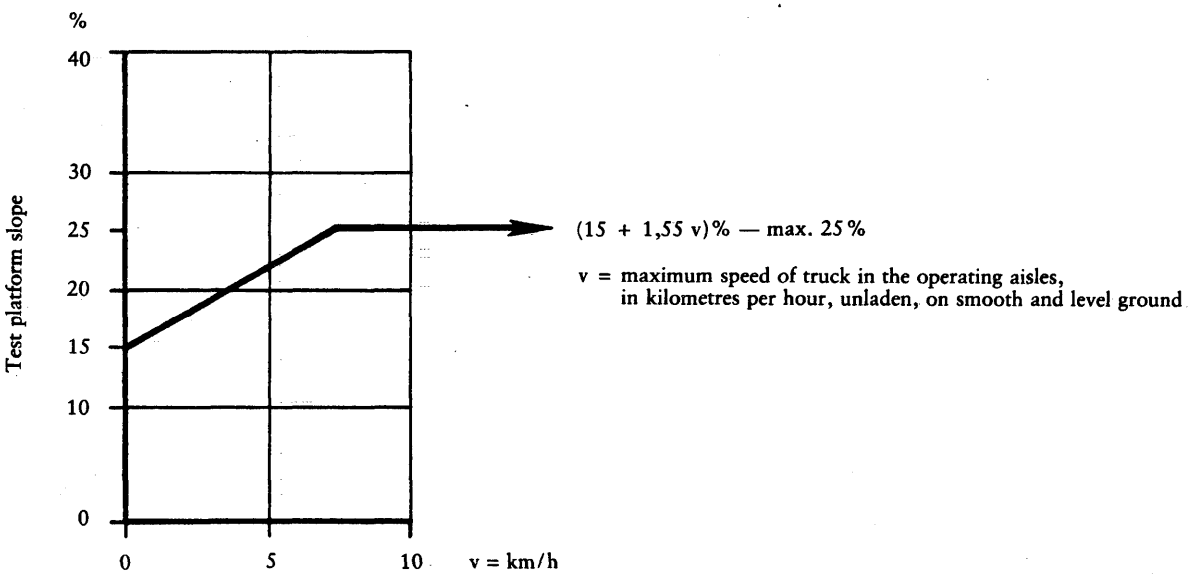

Figure 32

Test No 9

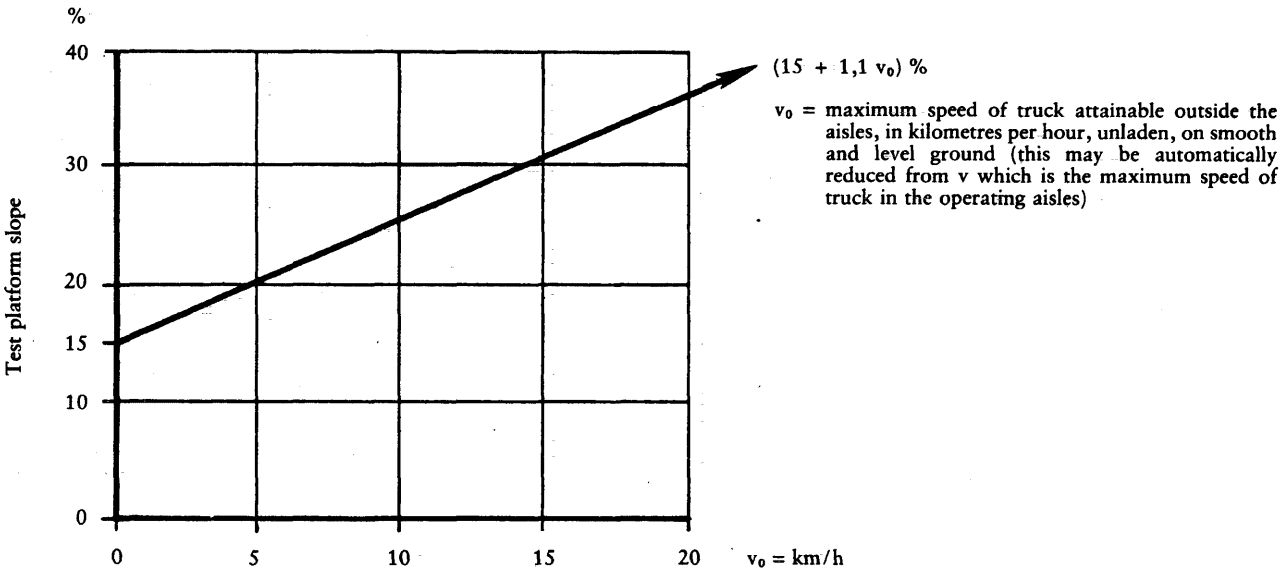

Figure 33

METHOD No 5

STABILITY TESTS FOR SINGLE SIDE LOADING FORK LIFT TRUCKS

1. OBJECTIVE AND SCOPE

These requirements specify the basic tests for the verification of stability of single side loading fork lift trucks up to and including 10 000 kg rated capacity with tiltable or non-tiltable mast or fork arms. It is applicable to trucks fitted with fork arms and/or attachments, but does not apply to trucks when adapted for use with suspended loads which may swing freely.

2. CONDITIONS OF VALIDITY

The following stability tests in these requirements ensure that the type of truck specified has satisfactory stability when reasonably and appropriately used under normal operating conditions, namely:

(a) operating (travelling and stacking) on substantially smooth, level and prepared surfaces;

(b) travelling with the mast or fork arms tilted backwards and the load retracted and in the lowered (travelling) position, or resting on the load-carrying deck;

(c) stacking with the mast substantially vertical and the fork arms substantially horizontal;

(d) operating with the load centre of gravity approximately on the centre plane between the mast uprights.

Where operating conditions differ from normal, reference shall also be made to methods No 9, No 10 and No 11.

3. CONDITIONS OF TEST

3.1. Equipment and method

Stability shall be verified by means of the tests described hereafter using a test platform which can be tilted about one side.

The truck under test shall be placed on the platform, which is initially in the horizontal plane, sequentially in the positions described in the table of tests. For each of the truck positions, the platform shall be tilted slowly and smoothly to the slope indicated in the table. The truck is considered stable if it passes all the tests without overturning.

For the purpose of these tests, the overturning value of the test platform's slope is that which, if increased, would produce complete overturning of the truck.

During the tests there shall be at no moment less than three different points of contact with the platform; one of these contacts shall be made with a wheel.

3.2.1. *General*

The tests shall be carried out with the truck ready for use without operator (fuel tanks of engined trucks shall be full if stability is thereby reduced; all other tanks shall be filled to their correct operating levels). The load-carrying means shall be fully equipped with any protective or supplementary lifting apparatus supplied as original equipment, and the mast or fork arms, if adjustable for tilt, shall be positioned in accordance with the table of tests. Where applicable, tyres shall be inflated to the pressures specified by the manufacturer, and where tyre ballast is permitted it shall be used in accordance with the manufacturer's instructions.

3.2.2. *Verification of the vertical position of the mast*

Before starting test No 1 the vertical position of the mast shall be verified by means of a plumb-line or other suitable equipment.

Projection onto the horizontal platform of the centre of gravity G (or any other point such as E having a fixed relationship to G) shall, at the selected test height, be the same as with the load lowered to the normal

travelling height. Deviations caused by deflection shall be corrected by varying the tilt of the mast or fork arms within the limits imposed by the design of the truck.

This procedure does not apply to trucks where the design does not allow such corrections.

3.2.3. *Lift height for tests simulating travelling*

For tests simulating travelling, the upper face of the load platform or fork arms at the heels shall be positioned 300 mm from the ground or at the minimum height for transporting the load, whichever is the greater.

3.2.4. *Lift height for tests simulating stacking*

For tests simulating stacking the lift height shall be measured between the surface of the tilting platform and the upper surface of the fork blade.

3.3. **Effect of the operator's weight on stability**

The operator on rider-controlled trucks shall be represented by a weight (mass) of 90 kg if the stability during a test is thereby decreased. For a standing operator, the weight (mass) shall be secured with its centre of gravity 1 000 mm above the centre of the footplate at the control position. For a seated operator, the weight (mass) shall be secured with its centre of gravity 250 mm above the operator's seat in a compressed condition. Where the operator's position can be moved relative to the truck it shall be located for each test in the position that minimizes the truck's stability.

3.4. **Location of the truck on the test platform**

The specified position of the truck on the test platform shall be maintained during each test.

Wheel rotation shall be prevented by application of the handbrake, or service brakes, which may be secured in the 'on' position. Additionally, the wheels may be wedged against the truck frame but in such a way that any axle/frame articulation is not affected.

It is permissible to use chocks or blocks between the wheels and the test platform to prevent the truck sliding out of position. The height of the chocks or blocks shall not exceed the values indicated in the following table:

Outside diameter (d) of the wheel	Maximum height of chocks or blocks
Up to 250 mm	25 mm
Over 250 mm	0,1 d

3.5. **Test load**

The test load shall be a weight (mass) equivalent to the rated load Q acting through a centre of gravity G, nominally positioned at the standard load centre distance D, horizontally from the face of the fork arm shank and vertically from the upper face of the fork arm blade (see figure 1).

The centre of gravity G shall be on the centre plane between the mast uprights.

Figure 1

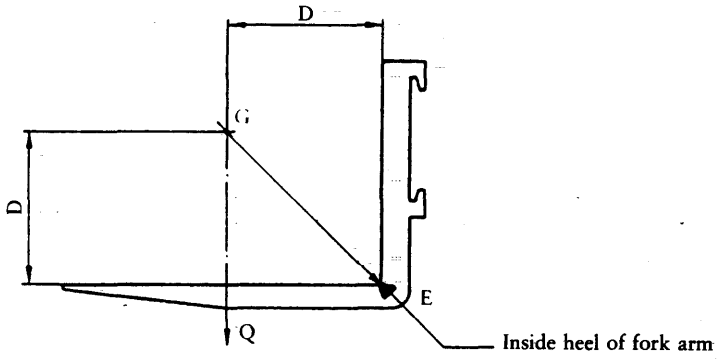

If the manufacturer shows other possible ratings, on the capacity plate tests shall be carried out with maximum load at the corresponding height as well as with the load corresponding to the maximum height.

3.6. **Safety precautions**

Precautions should be taken to prevent the overturning of the truck or the displacement of the test load during the tests.

Where lashings are used to prevent the truck overturning, they shall be sufficiently supple and arranged with sufficient slack so that no appreciable restriction is imposed on the truck until the overturning movement starts.

Displacement of the load may be prevented by means such as:

(a) firmly securing to the load carrier;

(b) suspending near the ground by a rope, chain etc., in such a manner that the upper end of the suspension means acts at the point G where the centre of gravity of a fixed test load would otherwise be located.

4. TEST PROCEDURE

The truck shall be positioned in accordance with the table of tests.

Tests shall be conducted to the side which is least stable with a line through points N and M parallel to the tilting axis XY.

Point N is the centre point of the area of contact between the platform and a non-oscillating wheel or stabilizer pad.

Point M is defined as:

(a) for trucks with an articulating axle (figures 13 and 14), M is the vertical projection into the platform of the point of intersection between the centre plane of the truck and the centre line of the axle;

(b) for trucks without an articulating axle or with axle locks or stabilizers in use, point M is the centre point of the area of contact between the platform and another wheel or a stabilizer pad.

When the truck rating is related to the use of stabilizers, suspension locks etc., such devices shall be used during tests. If the truck may also be used without their engagement, an additional test shall be carried out in this condition.

5. TESTS FOR TRUCKS FITTED WITH ATTACHMENTS

Trucks fitted with attachments shall be subjected to the foregoing stability tests.

The test load and its position shall be those specified on the capacity plate(s) of the truck fitted with the attachment and used in compliance with the instructions of the manufacturer.

The lift heights required in the tests shall be measured between the surface of the tilting platform and the underside of the load or attachment, whichever is the smaller.

Tests for lateral stability			
Test No	1		2
Test of stability when	Stacking		Stacking
Test load	With		With
Load centre distance	D of test load		D of test load
Lift height	Maximum (see 3.5)		Maximum (see 3.5)
Position of carrying device	Extended		Retracted
Tilt of mast or fork arms	Vertical (see 3.2.2)		Maximum backward tilt
Position on test platform	Figures 2 and 5 or 6 and/or 3 and 7		Figures 4 and 8 or 9
Test platform slope	4 % up to and excluding 5 000 kg	3,5 % from 5 000 kg included up to 10 000 kg included	6 %

Figure 2

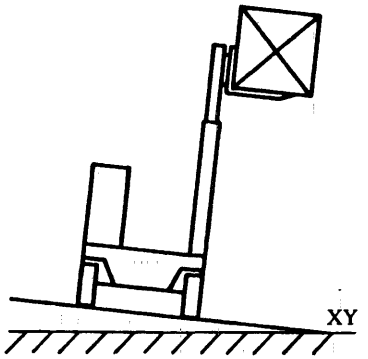

Figure 3

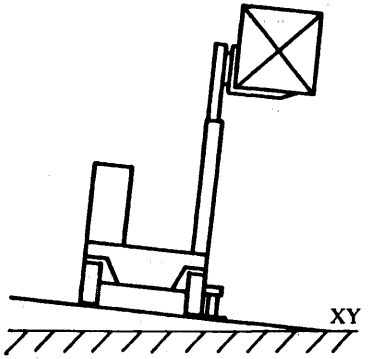

Figure 4

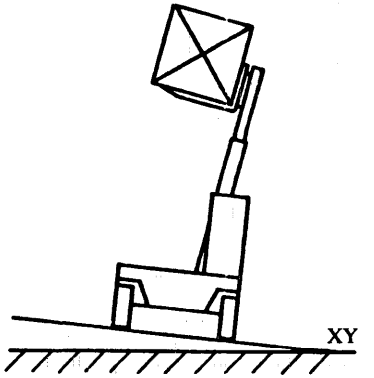

Figure 5

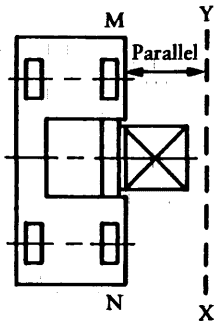

Figure 6

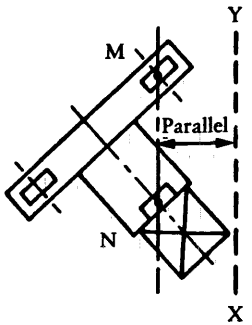

Figure 7

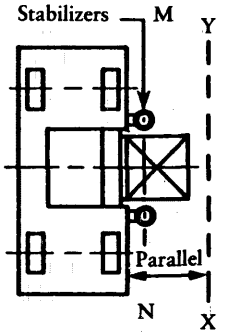

Figure 8

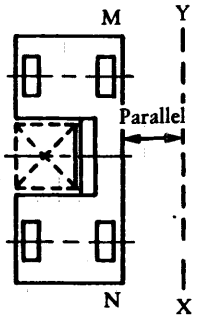

Figure 9

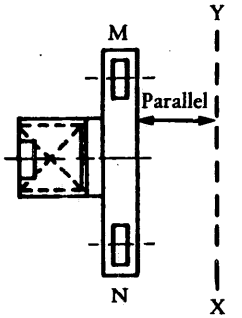

MN = truck axis of original tilt
XY = test platform tilt axis

Tests for lateral stability			
Test No	3	4	5
Test of stability when	Travelling	Travelling	Stacking
Test load	Without	Without	Without
Load centre distance	—	—	—
Lift height	Lowered (see 3.2.3)	Lowered (see 3.2.3)	Maximum
Position of carrying device	Retracted	Retracted	Retracted
Tilt of mast or fork arms	Positioned so that the truck is in the condition of minimum stability		Vertical (see 3.2.2)
Position on test platform	Figures 10 and 13 or 15	Figures 11 and 14 or 16	Figures 12 and 8 or 9
Test platform slope	See figure 17	See figure 17	8 %
MN = Truck axis of original tilt XY = Test platform tilt axis	Figure 10 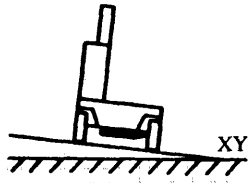 	Figure 11 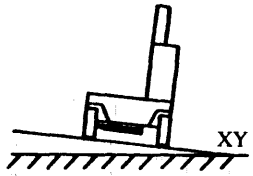 	Figure 12 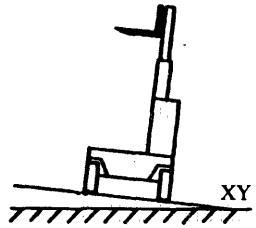
	Figure 13 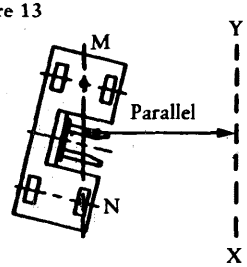 	Figure 14 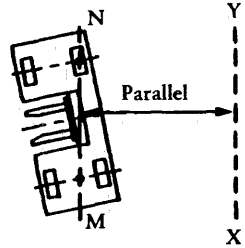 	Figure 17 (18 + 0,62 V) % — max. 35 % v = maximum speed of truck in kilometres per hour, unladen, on smooth and level ground 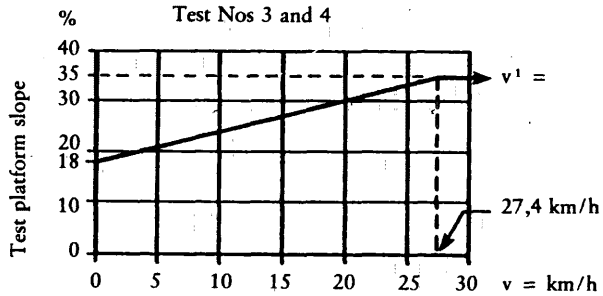
	Figure 15 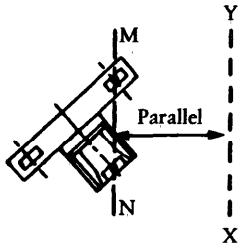 	Figure 16 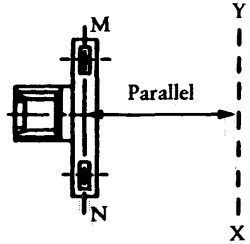 	

METHOD No 6

STABILITY TESTS FOR BI-DIRECTIONAL AND MULTI-DIRECTIONAL TRUCKS

1. OBJECTIVE AND SCOPE

These requirements specify the basic tests for the verification of stability of bi-directional and multi-directional trucks up to and including 10 000 kg rated capacity with tiltable or non-tiltable mast or fork arms. It is applicable to trucks fitted with fork arms and/or attachments, but does not apply to trucks when adapted for use with suspended loads which may swing freely.

2. CONDITIONS OF VALIDITY

The following stability tests in these requirements ensure that the type of truck specified has satisfactory stability when reasonably and appropriately used under normal operating conditions, namely:

(a) operating (travelling and stacking) on substantially smooth, level and prepared surfaces;

(b) travelling with the mast or fork arms tilted backwards and the load in the lowered (travelling) position;

(c) stacking with the mast substantially vertical and the fork arms substantially horizontal;

(d) operating with the load centre of gravity approximately on the longitudinal centre plane of the truck.

Where operating conditions differ from normal, reference shall also be made to methods No 9, No 10 and No 11.

3. CONDITIONS OF TEST

3.1. Equipment and method

Stability shall be verified by means of the tests described hereafter using a test platform which can be tilted about one side.

The truck under test shall be placed on the platform, which is initially in the horizontal plane, sequentially in the positions described in the table of tests. For each of the truck positions, the platform shall be tilted slowly and smoothly to the slope indicated in the table. The truck is considered stable if it passes all the tests without overturning.

For the purpose of these tests, the overturning value of the test platform's slope is that which, if increased, would produce complete overturning of the truck. It is permissible in lateral tests for one of the load wheels to lose contact with the platform, and it is acceptable for parts of the structure or other designed features to make contact with the test platform.

3.2. Condition of the truck

3.2.1. *General*

The tests shall be carried out with the truck ready for use without operator (fuel tanks of engined trucks shall be full if stability is thereby reduced; all other tanks shall be filled to their correct operating levels). The load-carrying means shall be fully equipped with any protective or supplementary lifting apparatus supplied as original equipment, and the mast or fork arms, if adjustable for tilt, shall be positioned in accordance with the table of tests. Where applicable, tyres shall be inflated to the pressures specified by the manufacturer, and where tyre ballast is permitted it shall be used in accordance with the manufacturer's instructions.

3.2.2. *Verification of the vertical position of the mast*

Before starting test No 1 the vertical position of the mast shall be verified by means of a plumb-line or other suitable equipment.

Projection onto the horizontal platform of the centre of gravity G (or any other point such as E having a fixed relationship to G) shall, at the selected test height, be the same as with the load lowered to the normal

travelling height. Deviations caused by deflection shall be corrected by varying the tilt of the mast, or by retracting the mast or fork arms, within the limits imposed by the design of the truck.

This procedure does not apply to trucks where the design does not allow such corrections.

3.2.3. *Lift height for tests simulating travelling*

For test simulating travelling, the upper face of the fork arms at the heels shall be positioned 300 mm from the ground or at the minimum height for transporting the load, whichever is the greater.

3.2.4. *Lift height for tests simulating stacking*

For tests simulating stacking the lift height shall be measured between the surface of the tilting platform and the upper surface of the fork blade.

3.3. **Effect of the operator's weight on stability**

The operator on rider controlled trucks shall be represented by a weight (mass) of 90 kg if the stability during a test is thereby decreased. For a standing operator, the weight (mass) shall be secured with its centre of gravity 1 000 mm above the centre of the footplate at the control position. For a seated operator, the weight (mass) shall be secured with its centre of gravity 250 mm above the operator's seat in a compressed condition.

3.4. **Location of the truck on the test platform**

The specified position of the truck on the test platform shall be maintained during each test.

Wheel rotation shall be prevented by application of the handbrake, or service brakes, which may be secured in the 'on' position. Additionally, the wheels may be wedged against the truck frame but in such a way that any axle/frame articulation is not affected. However, as a safety measure when testing longitudinally with the articulating axle parallel and nearer to the tilt axls of the platform, the articulation of the axle may be locked/blocked.

It is permissible to use chocks or blocks between the wheels and the test platform to prevent the truck sliding out of position. The height of the chocks or blocks shall not exceed the values indicated in the following table:

Outside diameter (d) of the wheel	Maximum height of chocks or blocks
Up to 250 mm	25 mm
Over 250 mm	0,1 d

3.5. **Test load**

The test load shall be a weight (mass) equivalent to the rated load Q acting through a centre of gravity G, nominally positioned at the standard load centre distance D, horizontally from the face of the fork arm shank and vertically from the upper face of the fork arm blade (see figure 1).

The centre of gravity G (or the equivalent point in the case of unladen trucks) shall be on the centre plane between the mast uprights.

Figure 1

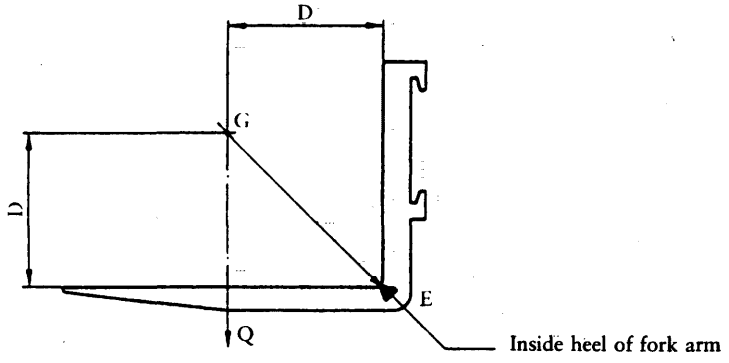

If the manufacturer shows other possible ratings, on the capacity plate tests shall be carried out with maximum load at the corresponding height as well as with the load corresponding to the maximum height.

3.6. **Safety precautions**

Precautions should be taken to prevent the overturning of the truck or the displacement of the test load during the tests.

Where lashings are used to prevent the truck overturning, they shall be sufficiently supple and arranged with sufficient slack so that no appreciable restriction is imposed on the truck until the overturning movement starts.

Displacement of the test load may be prevented by means such as:

(a) firmly securing to the load carrier;

(b) suspending near the ground by a rope, chain etc., in such a manner that the upper end of the suspension means acts at the point G where the centre of gravity of a fixed test load would otherwise be located.

4. TEST PROCEDURE

The truck shall be positioned in accordance with the table of tests.

Lateral tests shall be conducted to the side to which the truck is least stable with a line through points MN of the truck parallel to the tilting axis XY of the platform.

The truck wheel positions and general truck configurations in the diagrams are representative only and other arrangements are permissible provided the general principles relating to the test position are maintained.

5. TESTS FOR TRUCKS FITTED WITH ATTACHMENTS

Trucks fitted with attachments shall be subjected to the foregoing stability tests, except where the attachment can bring the centre of gravity of the load out of the longitudinal centre plane of the truck (see method No 10).

The test load and its position shall be those specified on the capacity plate(s) of the truck fitted with the attachment and used in compliance with the instructions of the manufacturer.

The lift heights required in the tests shall be measured between the surface of the tilting platform and the underside of the load or attachment, whichever is the smaller.

Tests for longitudinal stability

Test No	1		2	
Test of stability when	Stacking		Stacking	
Test load	With		With	
Load centre distance	D of test load		D of test load	
Lift height	Maximum (see 3.5)		Maximum (see 3.5)	
Position of carrying device	Extended (where design permits)		Retracted	
Tilt of mast or fork arms	Vertical (see 3.2.2)		Position of least stability	
Position on test platform	Figures 2 and 6 or 3 and 7 (1)		Figures 4 and 8 or 5 and 9 (1)	
Test platform slope	4 % up to and excluding 5 000 kg	3,5 % from 5 000 kg included up to 10 000 kg included	14 %	
(1) The wheels shall be orientated to the straight ahead position for non-retracting mast trucks and to the position of least stability for retracting mast trucks	Figure 2 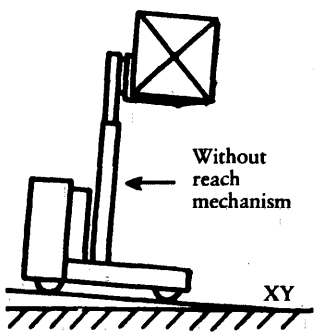	Figure 3 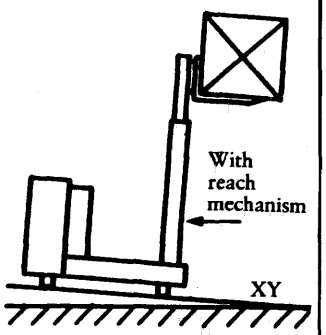	Figure 4 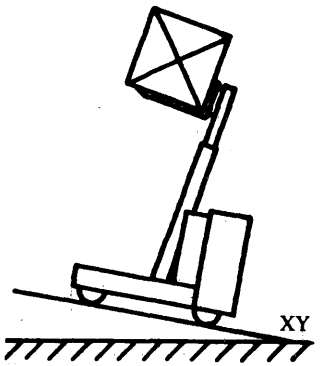	Figure 5 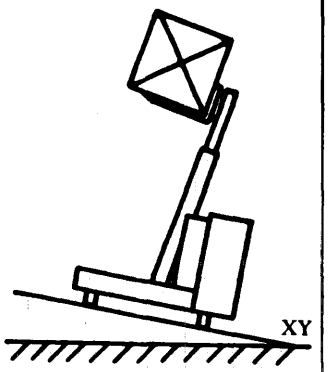
AB = longitudinal centre line of truck XY = test platform tilt axis	Figure 6 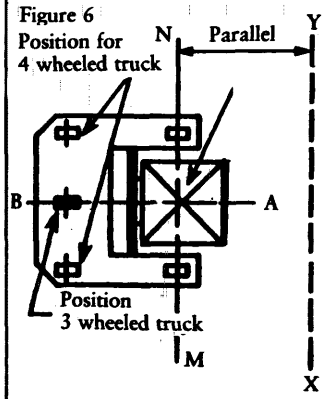	Figure 7 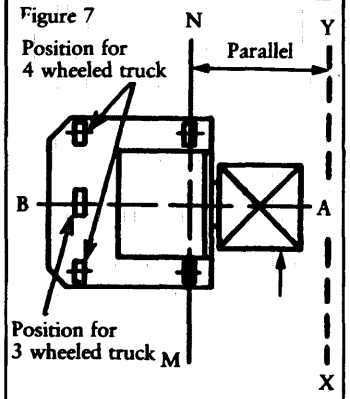	Figure 8 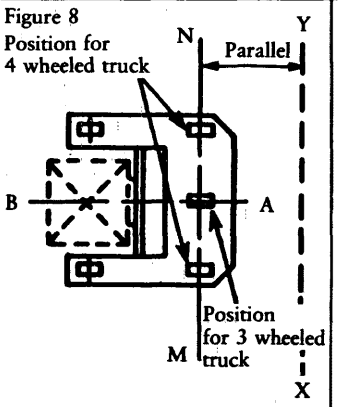	Figure 9 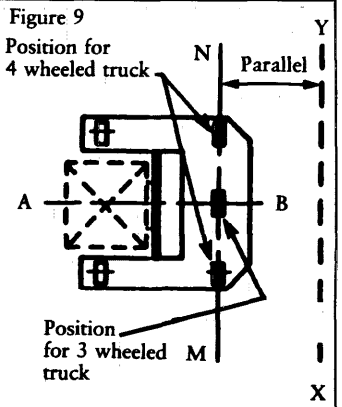

Tests for longitudinal stability

Test No	3	4	5
Test of stability when	Stacking	Stacking	Travelling
Test load	Without	Without	Without
Load centre distance	—	—	—
Lift height	Maximum	Maximum	Lowered (see 3.2.3)
Position of carrying device	Rectracted	Rectracted	Rectracted
Tilt of mast or fork arms	Positioned so that the truck is in the condition of minimum stability		Maximum backwardt tilt
Position on test platform	Figures 10 and 8 (1)	Figures 11 and 9	Figures 12 and 8 (2)
Test platform slope	14 % when one or no brakes and 18 % when two brakes are fitted to the wheels at the operator's end of the truck	14 %	(See figure 13 and note (3))

(1) The wheels shall be orientated to the straight ahead position for non-retracting mast trucks and to the position of least stability for retracting mast trucks

(2) The truck shall be placed on the platform with the fork arms generally directed away from the tilt axis of the platform and the truck in the position of least stability which need not be the cardinal position. The wheels shall be orientated so that their axes remain parallel to the platform tilt axis (as far as it is possible).

XY = test platform tilt axis

Figure 10

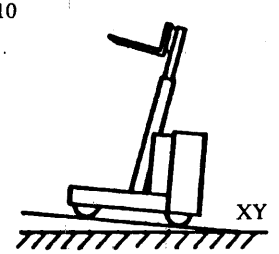

Figure 11

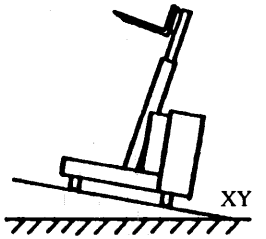

Figure 12

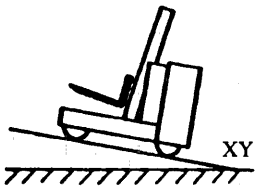

Figure 13

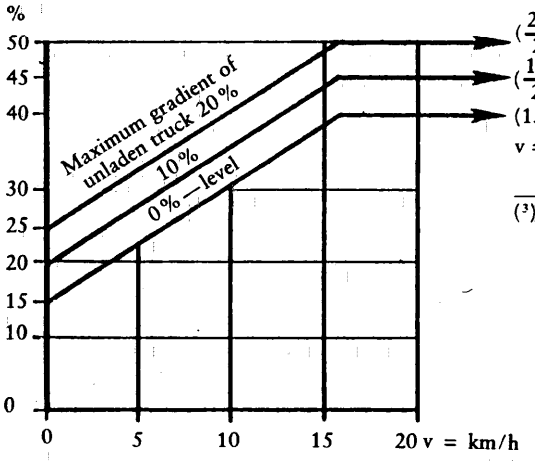

$(\frac{20}{2} + 15 + 1{,}55\ v)$ % — max. 50 %

$(\frac{10}{2} + 15 + 1{,}55\ v)$ % — max. 45 %

$(15 + 1{,}55\ v)$ % — max. 40 %

v = maximum speed of truck in kilometres per hour, unladen, on smooth and level ground

(3) The various values of the gradient in figure 13, or those calculated using the appropriate formula, are applied according to the intended performance of the truck.
Thus, if designed for and intended solely for use on level floors, only the curve marked '0 % level' should be used for determining the slope of the test platform. If designed for and intended for travelling unladen up and down gradients of 10 %, the test platform slope value indicated by the '10 %' curve should be used; and similarly for the curve marked '20 %'.
If designed for and intended for travelling up and down gradients between the above curves, the test platform slope should be calculated using one of the following formulae.

$\alpha = 15 + 0{,}5\ i + 1{,}55\ v$ [max. $(40 + 0{,}5\ i)$ %]

where α = test platform slope, expressed as a percentage (%)
i = maximum gradient, expressed as a percentage (%), of the unladen truck
v = maximum speed of truck in kilometres per hour, unladen, on smooth and level ground

Tests for lateral stability	
Test No	6
Test of stability when	Travelling
Test load	Without
Load centre distance	—
Lift height	Lowered (see 3.2.3)
Position of carrying device	Retracted
Tilt of mast or fork arms	Maximum backward if stability is thereby reduced, otherwise vertical
Position on test platform	Figures 14, 15, 16, 17 (see note (1)) and 18 to 27
Test platform slope	See figure 40

Figure 14

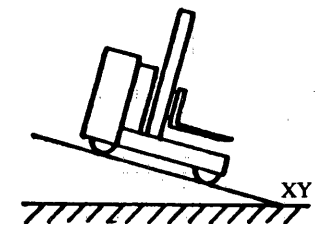

Figure 15

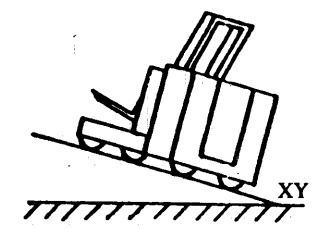

Figure 16

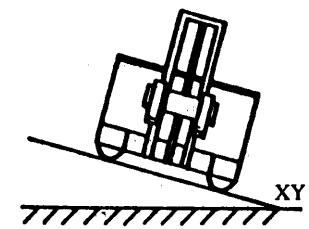

Figure 17

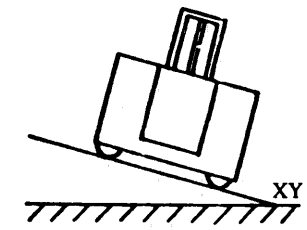

(1) The truck shall be placed on the platform with the truck axis of original tilt (line MN) parallel to the tilt axis XY of the platform. The wheel orientation must correspond to the selected direction of travel. The precise position of the truck and wheels can only be determined by trial and experience. When trials or experience indicate no definite single position of least stability, tests in several different positions may be necessary.

MN = truck axis of original tilt
XY = test platform tilt axis

Figure 18

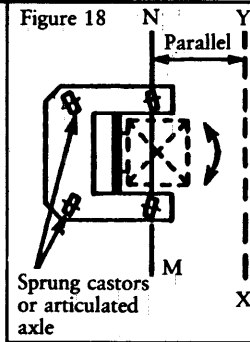

Figure 19

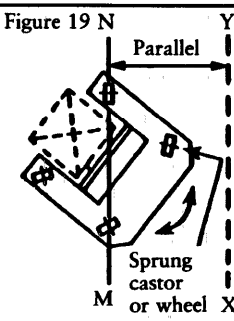

Figure 20

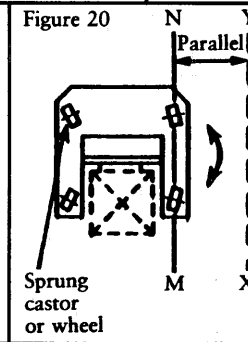

Figure 21

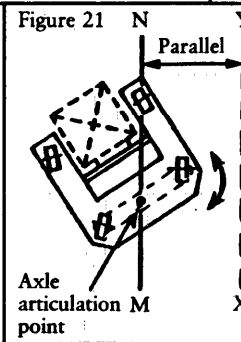

Figure 22

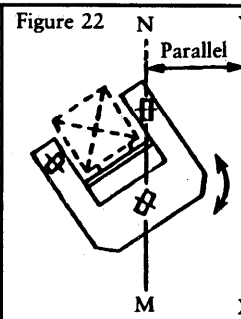

Figure 23

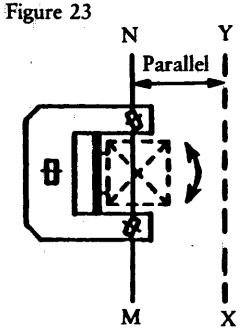

Figure 24

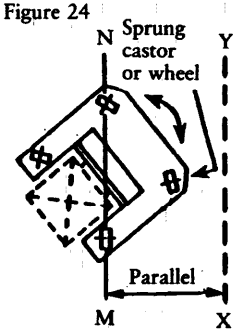

Figure 25

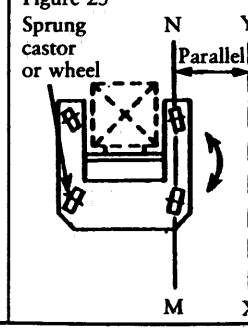

Figure 26

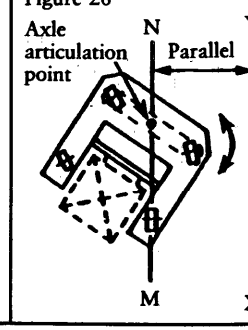

Figure 27

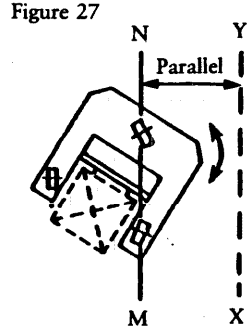

Test for lateral stability				
Test No	7		8	
Test of stability when	Travelling		Stacking	
Test load	With		With	
Load centre distance	D of test load		D of test load	
Lift height	Lowered (see 3.2.3)		Maximum (see 3.5)	
Position of carrying device	Retracted		Retracted	
Tilt of mast or fork arms	Maximum backwards if stability is thereby reduced, otherwise vertical			
Position on test platform	Figures 28, 29, 32, 33 (see note (1) and 18 to 27)		Figures 30, 31, 34, 35 (see note (1) and 18 to 27)	
Test platform slope	18 %		6 %	
(1) The truck shall be placed on the platform with the fork arms generally directed away form the tilt axis of the platform and the truck in the position of least stability which need not be the cardinal position. The wheels shall be orientated so that their axes remain parallel to the platform tilt axis (as far as it is possible).	Figure 28 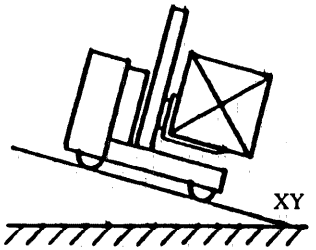	Figure 29 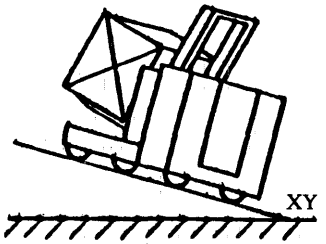	Figure 30 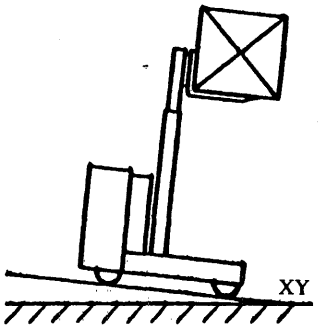	Figure 31 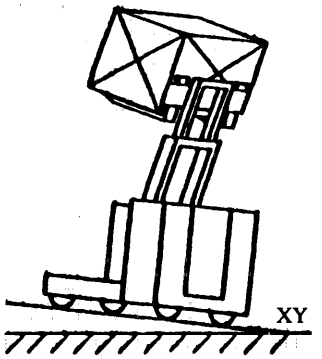
XY = test platform tilt axis	Figure 32 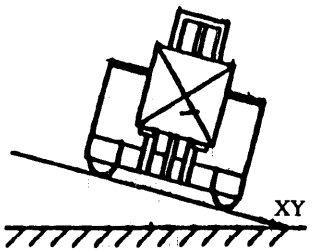	Figure 33 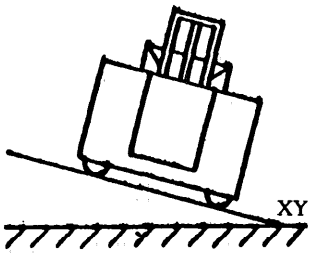	Figure 34 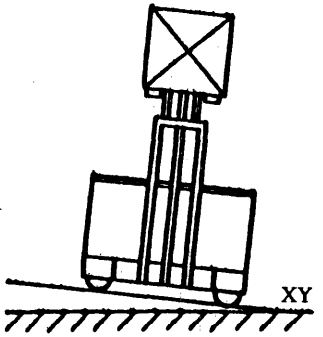	Figure 35 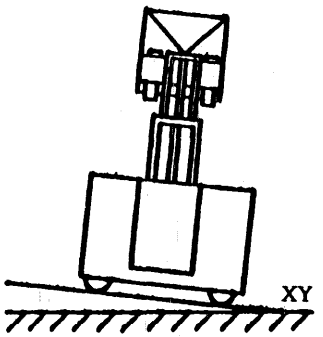

Test for lateral stability	
Test No	9
Test of stability when	Stacking
Test load	Without
Load centre distance	—
Lift height	Maximum
Position of carrying device	Retracted
Tilt of mast or fork arms	Maximum backwards if stability is thereby reduced, otherwise vertical
Position on test platform	Figure 36, 37, 38, 39 (see note (1)) and 18 to 27
Test platform slope	8 %

Figure 36

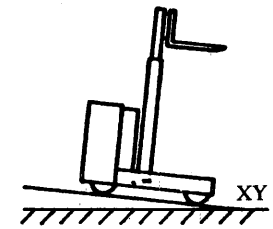

Figure 37

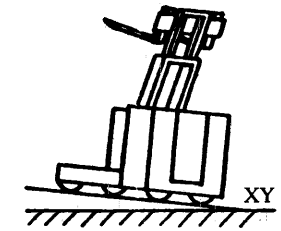

Figure 38

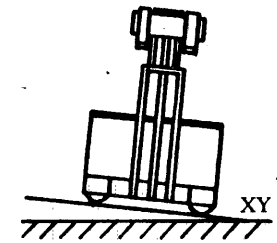

Figure 39

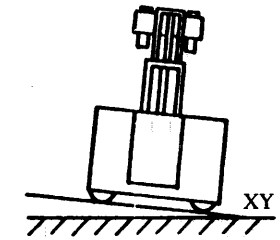

(1) The truck shall be placed on the platform with the fork arms generally directed away form the tilt axis of the platform and the truck in the position of least stability which need not be the cardinal position. The wheels shall be orientated so that their axes remain parallel to the platform tilt axis (as far as it is possible).

XY = Test platform tilt axis

Figure 40

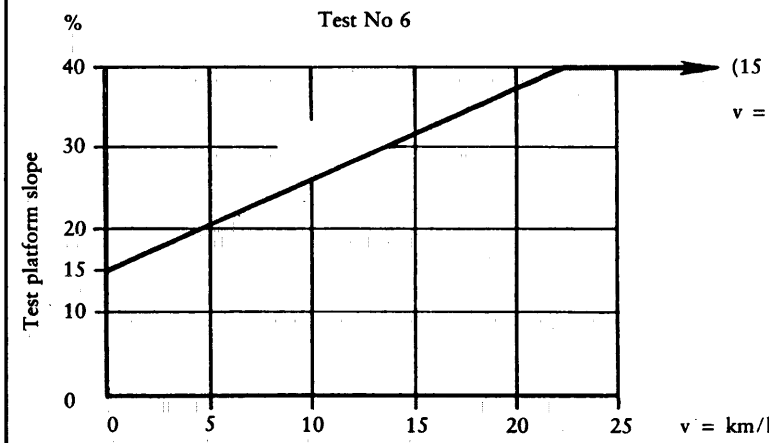

(15 + 1,1 v) % — max. 40 %

v = maximum speed of truck in kilometres per hour, unladen, on smooth and level ground

METHOD No 7

STABILITY TESTS FOR HIGH LIFT LATERAL (AND FRONT) STACKING TRUCKS

1. OBJECTIVE AND SCOPE

These requirements specify the basic tests for the verification of stability of high lift lateral (and front) stacking trucks up to and including 10 000 kg rated capacity with tiltable or non-tiltable mast or fork arms. It is applicable to trucks fitted with fork arms and/or attachments, but does not apply to trucks when adapted for use with suspended loads which may swing freely.

2. CONDITIONS OF VALIDITY

These requirements apply to power-operated high lift lateral (and front) stacking trucks with either elevating or non-elevating operator's position. They may be designed to be guided, free ranging, or both.

When guided (1) these requirements apply to trucks:

(a) that are not restrained from overturning by external means;

and

(b) that are partly restrained from overturning by external means.

Truck types in (b) shall be tested to these requirements to verify the stability in those modes in which they are not restrained. Additionally, the restraining means shall be verified by alternative methods (1).

High lift lateral (and front) stacking trucks, when guided, may have the operator's position and/or the load carrier re-positioned or operated whilst travelling, provided the appropriate conditions and safety requirements (1) and the stability requirements are fully satisfied.

Conventional trucks fitted with lateral (and front) attachments may only operate in this way as lateral stacking trucks if they meet all the appropriate conditions and requirements.

Conventional trucks fitted with lateral (and front) attachments which do not satisfy the tests in these requirements and/or do not meet the associated conditions and requirements shall be tested in accordance with method No 1 or No 2 and their rated capacity shall be adjusted to comply with the off-centre load test in method No 10. They shall be operated as conventional trucks even within the aisles. Travelling with an elevated load or load carrier, other than at creep speed, is not permissible.

The following stability tests ensure that the type of truck specified has satisfactory stability when reasonably and appropriately used under normal operating conditions (1).

2.1. Normal operating conditions

2.1.1. *Normal operation guided within aisles*

Guided operation is considered normal if a truck is:

(a) operated with the load or load carrier at a height at which traction speed is not restricted below the maximum for which the truck is capable;

(b) operated with the load or load carrier elevated up to a height at which traction of the truck is still allowed, possibly at reduced speed and with correspondingly reduced braking;

(c) operated when stacking at any height up to the maximum. Traction at these heights may be totally inhibited or limited to creep speed (1).

2.1.2. *Normal operation when free ranging (unguided)*

Free ranging operation is considered normal if a truck is:

(a) operated at speeds up to v_0 (2) with the load or load carrier lowered (500 mm maximum) and approximately centrally positioned and not reached forward. The drawbar drag F (3) exerted by the brakes, if not at conventional level, shall either be restored to the level associated with conventional trucks or the speed v_0 shall be automatically restricted to not more than 9 km/h (5,6 mile/h)

or

(1) For details of definitions and safety rules see Annex 1, Chapter 10, 'Special requirements' of Directive 86/663/EEC.

(2) v_0 = maximum speed of the truck attainable outside the aisle in km/h or mile/h (this may be automatically reduced from v which is the maximum speed of the truck in the operating aisles).

(3) F = drawbar drag exerted by the brakes, or tractive effort expressed as a percentage of the gross weight (mass) of the truck, with or without load, as applicable.
When the mast or fork arms can be moved out, the value F shall apply with the mast or fork arms in the retracted position.

(b) operated at speeds not more than 4 km/h (2,5 mile/h) with the load or load carrier elevated over 500 mm but not more than 2,5 m, with the steering in the substantially straight ahead position. Traction other than at creep speed shall be automatically prevented when the steering departs from the substantially straight ahead position

or

(c) used for stacking up to a lift height authorized by the manufacturer. Traction shall be limited to creep speed;

(d) additionally if equipped for three-way stacking, is used for front stacking only when facing a stack (test 8 applies).

3. CONDITIONS OF TEST

3.1. **Equipment and method**

Stability shall be verified by means of the tests described hereafter using a test platform which can be tilted about one side.

The truck under test shall be placed on the platform, which is initially in the horizointal plane, sequentially in the positions described in the table of tests. For each of the truck positions, the platform shall be tilted slowly and smoothly to the slope indicated in the table. The truck is considered stable if it passes all the tests without overturning.

For the purpose of these tests, the overturning value of the test platform's slope is that which, if increased, would produce complete overturning of the truck. It is permissible in lateral tests for one of the load wheels to lose contact with the platform, and it is acceptable for parts of the structure or other designed features to make contact with the test platform.

3.2. **Condition of the truck**

3.2.1. *General*

The tests shall be carried out with the truck ready for use without operator (fuel tanks of engined trucks shall be full if stability is thereby reduced; all other tanks shall be filled to their correct operating levels). The load-carrying means shall be fully equipped with any protective or supplementary lifting apparatus supplied as original equipment. If the mast is retractable it shall be positioned to give the condition of least stability. Where applicable, tyres shall be inflated to the pressures specified by the manufacturer, and where tyre ballast is permitted it shall be used in accordance with the manufacturer's instructions.

3.2.2. *Verification of the vertical position of the mast*

Before starting tests Nos 3, 4, 6, 7 and 8 the vertical position of the mast shall be verified by means of a plumb-line or other suitable equipment.

Projection onto the horizontal platform of the centre of gravity G (or any other point such as E having a fixed relationship to G) shall, at the selected test height, by the same as with the load lowered to the normal travelling height. Deviations caused by deflection shall be corrected by varying the tilt of the mast, within the limits imposed by the design of the truck.

This procedure does not apply to trucks where the design does not allow such corrections.

3.2.3. *Lift height for tests simulating travelling*

For tests simulating travelling, the upper face of the load platform or fork arms at the heels shall be positioned in accordance with the safety features embodied and the mode of travel being simulated.

3.3. **Effect of the operator's weight on stability**

The operator on rider-controlled trucks shall be represented by a weight (mass) of 90 kg if the stability during a test is thereby decreased. For a standing operator, the weight (mass) shall be secured with its centre of gravity 1 000 mm above the centre of the footplate at the control position. For a seated operator, the weight (mass) shall be secured with its centre of gravity 250 mm above the operator's seat in a compressed condition.

3.4. **Location of the truck on the test platform**

The specified position of the truck on the test platform shall be maintained during each test.

Wheel rotation shall be prevented by application of the handbrake, or service brakes, which may be secured in the 'on' position. Additionally, the wheels may be wedged against the truck frame but in such a way that any axle/frame articulation is not affected. However, as a safety measure when testing longitudinally with the articulating axie parallel and nearer to the tilt axis of the test platform, the articulation of the axie may be locked/blocked.

It is permissible to use chocks or blocks between the wheels and the test platform to prevent the truck sliding out of position. The height of the chocks or blocks shall not exceed the values indicated in the following table:

Outside diameter (d) of the wheel	Maximum height of chocks or blocks
Up to 250 mm	25 mm
Over 250 mm	0,1 d

3.5. **Test load** (See fig. 1)

The test load shall be a weight (mass) equivalent to the rated load Q acting through a centre of gravity G, nominally positioned at he standard load centre distance D, horizontally from the face of the fork arm shank and vertically from the upper face of the fork arm blade.

The centre of gravity G (or the equivalent point in the case of unladen trucks) shall be approximately on the centre plane between the mast uprights, except for test 7 when it shall be fully extended laterally.

When supplementary lift is fitted, the load/load carrier shall be in the fully raised position.

Figure 1

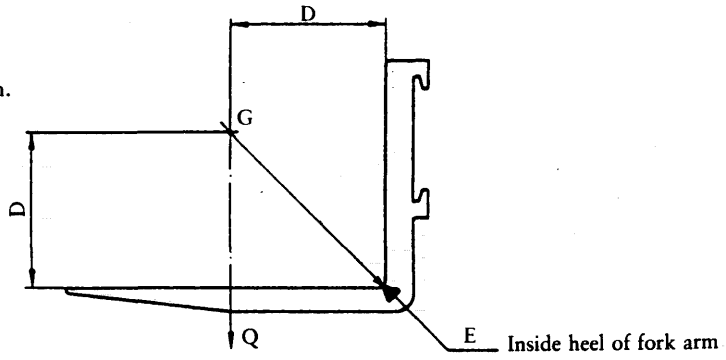

If the manufacturer shows other possible ratings, on the capacity plate tests shall be carried out with maximum load at the corresponding height as well as with the load corresponding to the maximum height.

3.6. **Safety precautions**

Precautions should be taken to prevent the overturning of the truck or the displacement of the test load during the tests.

Where lashings are used to prevent the truck overturning, they shall be sufficiently supple and arranged with sufficient slack so that no appreciable restriction is imposed on the truck until the overturning movement starts.

Displacement of the load may be prevented by means such as:

(a) firmly securing to the load carrier;

(b) suspending near the ground by a rope, chain etc., in such a manner that the upper end of the suspension means acts at the point G where the centre of gravity of a fixed test load would otherwise be located.

4. TEST PROCEDURE

The truck shall be positioned in accordance with the table of tests.

Lateral tests shall be conducted to the side to which the truck is least stable with a line through points MN of the truck parallel to the tilting axis XY of the platform.

The truck wheel positions and general truck configurations in the diagrams are representative only and other arrangements are permissible provided the general principles relating to the test position are maintained.

5. TESTS FOR TRUCKS FITTED WITH ATTACHMENTS

Trucks fitted with attachments shall be subjected to the foregoing stability tests.

The test load and its position shall be those specified on the capacity plate(s) of the truck fitted with the attachment and used in compliance with the instructions of the manufacturer.

The lift heights required in the tests shall be measured between the surface of the tilting platform and the underside of the load or attachment, whichever is the smaller.

Tests for longitudinal stability when operating guided within the Aisles				
Test No	1		2	
Test of stability when	Travelling		Travelling	
Test load	With		Without	
Load centre distance	D of test load		—	
Lift height	Maximum for unrestricted travelling (see 2.1.1 a)			
Position on test platform	Figures 2 and 3, 4 or 5 or 6 and 7, 8 or 9 (position of least stability)			
Test platform slope	When H ≤ 500 mm and V max. > 9 km/h: slope 18 % When H ≤ 500 mm and V max. ≤ 9 km/h: slope 1,3 F % When H > 500 mm: slope ± 1,3 F % (1)		See figure 39	
(1) F = drawbar drag exerted by the brakes, or tractive effort expressed as a percentage of the gross weight (mass) of the truck, with or without load, as applicable. When the mast or fork arms can be moved out, the value F shall apply with the mast or fork arms in the retracted position.	Figure 2	Figure 3	Figure 4	Figure 5
	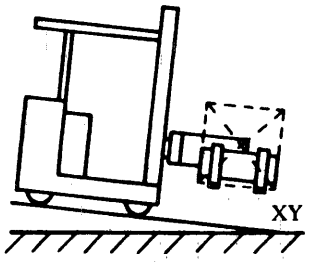	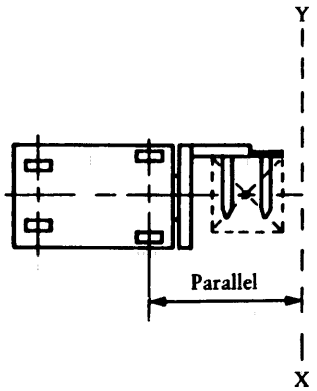	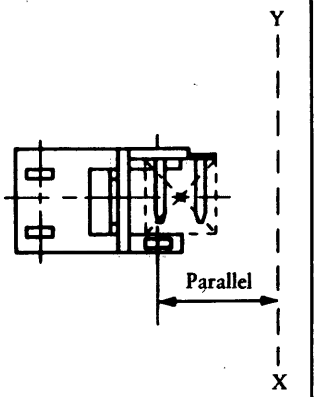	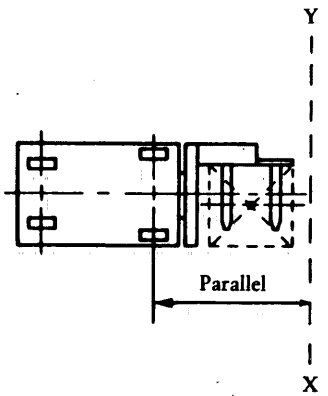
XY = test platform tilt axis	Figure 6	Figure 7	Figure 8	Figure 9
	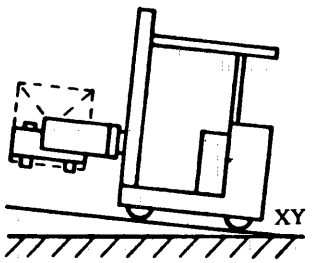	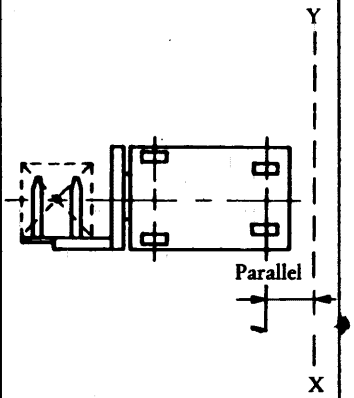	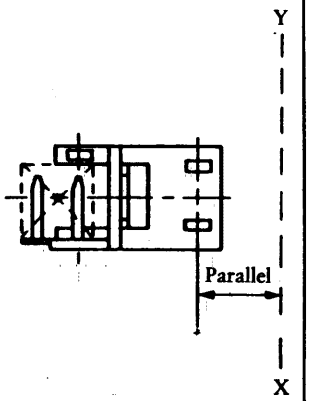	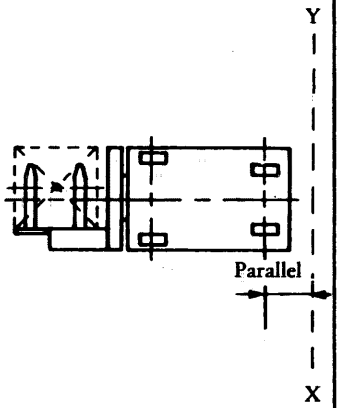

Tests for longitudinal stability when operating guided within the aisles

Test No	3	4	5	6
Test of stability when	Travelling	Travelling	Travelling	Stacking
Test load	With	With	Without	With
Load centre distance	D of test load	D of test load	—	D of test load
Lift height	Maximum for travelling (see 2.1.1 b)			Maximum (see 2.1.1 c)
Position on test platform	Figures 10 and 3, 4 or 5	Figures 11 and 7, 8 or 9	Figures 13 and 3, 4 or 5 or 14 and 7, 8 or 9 (position of least stability	Figures 12 and 3, 4 or 5 or 15 and 7, 8 or 9 (position of least stability)
Test platform slope	1,3 F% (1)	1,3 F% (1)	1,3 F% (1)	6%

(1) F = drawbar drag exerted by the brakes, or tractive effort expressed as a percentage of the gross weight (mass) of the truck, with or without load, as applicable.
When the mast or fork arms can be moved out, the value F shall apply with the mast or fork arms in the retracted position.

XY = test platform tilt axis

Figure 10

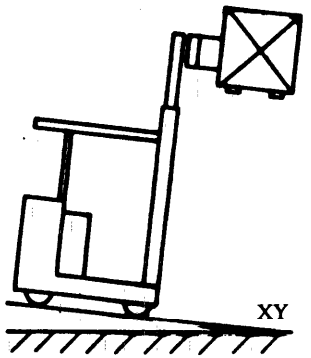

Figure 11

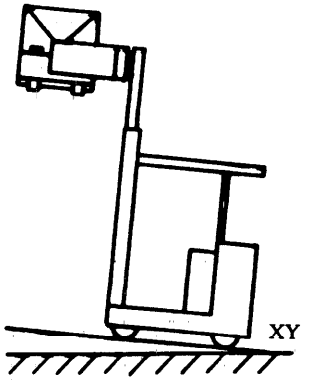

Figure 12

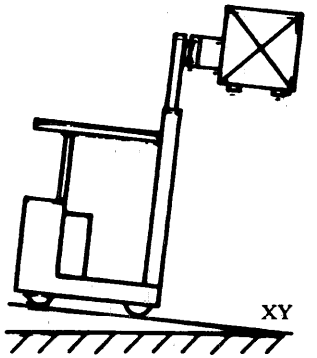

Figure 13

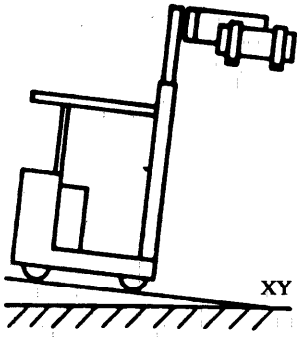

Figure 14

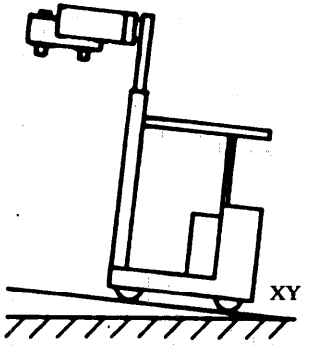

Figure 15

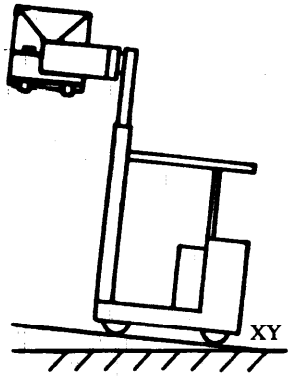

Stability tests	When operating guided within the aisles	When operating free ranging (unguided)
Test No	7	8
Test of stability when	Stacking	Stacking
Test load	With	With
Load centre distanca	D of test load	D of test load
Lift height	Maximum (see 2.1.1 c)	Maximum (see 2.1.2 d)
Position on test platform	Figures 16 and 18 or 19	Figures 17 and 20 or 21
Test platform slope	4 %	4 %
XY = test platform tilt axis	Figure 16 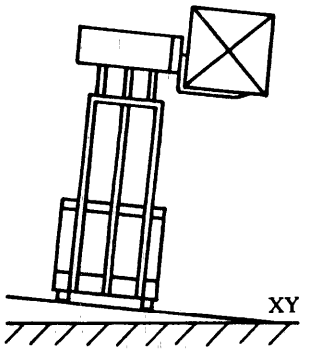	Figure 17 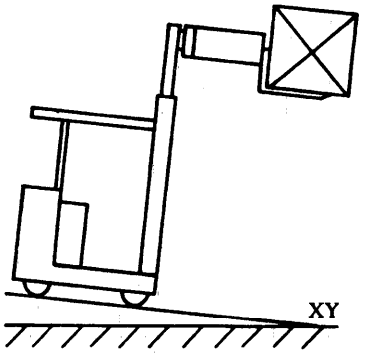
	Figure 18 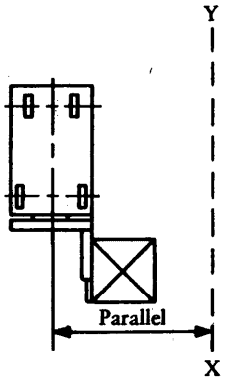	Figure 19 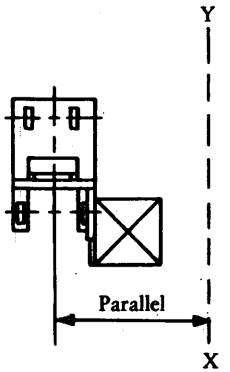
	Figure 20 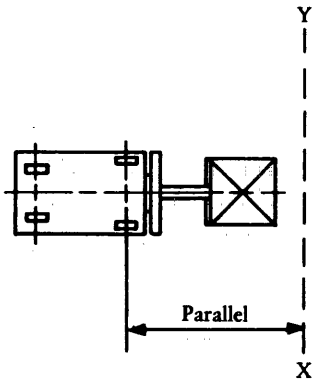	Figure 21 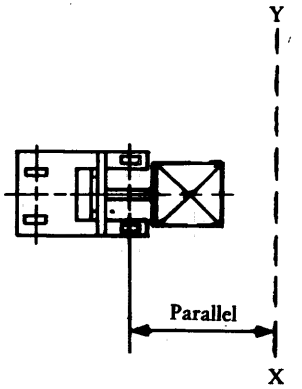

Tests for lateral stability when operating free ranging (unguided)			
Test No	9	10	11
Test of stability when	Stacking	Stacking	Turning
Test load	With	Without	Without
Load centre distance	D of test load	—	—
Lift height	Maximum (see 2.1.2 c)	Maximum (see 2.1.2 c)	Maximum (see 2.1.2 a)
Position on test platform	Figures 22 or 25 and 31 to 38, as applicable (position of least stability)	Figures 23 or 26 and 31 to 38, as applicable (position of least stability)	Figures 24 or 27 and 31 to 38, as applicable (position of least stability)
Test platform slope	6 %	8 %	See figure 40
XY = test platform tilt axis	Figure 22 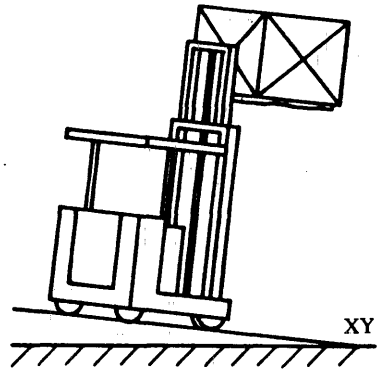	Figure 23 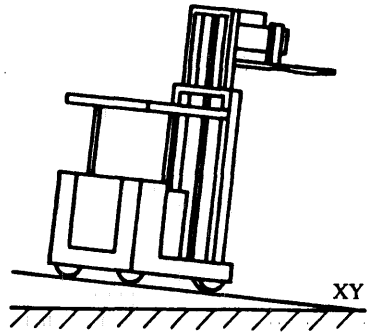	Figure 24 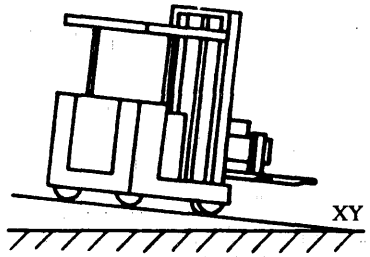
	Figure 25 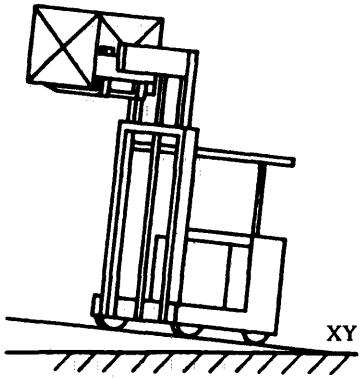	Figure 26 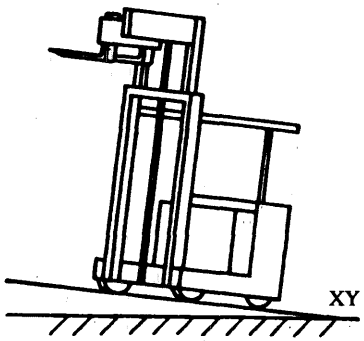	Figure 27 Mast tilted (if applicable) to the position of least stability 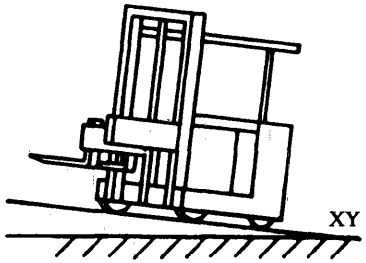

Tests for longitudinal stability when operating free ranging (unguided)			
Test No	12	13	14
Test of stability when	Stacking	Stacking	Travelling
Test load	With	Without	Without
Load centre distance	D of test load	—	—
Lift height	Maximum (see 2.1.2 c) (mast tilted, if applicable, to the position of least stability)		Maximum for unrestricted travelling (see 2.1.2 a) (mast fully tilted, if applicable)
Position on test platform	Figures 28 and 7, 8 or 9	Figures 29 and 7, 8 or 9	Figures 30 and 7, 8 or 9
Test platform slope	14 %	14 % when one or no brakes and 18 % when two brakes are fitted to the wheels at the operator's end of the truck	See figure 41
XY = test polatform tilt axis	Figure 28 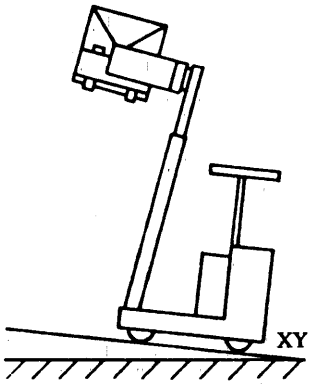	Figure 29 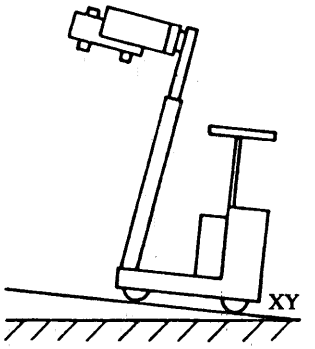	Figure 30 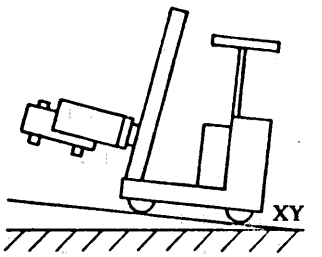

Position of truck on platform for tests 9, 10 and 11

Figure 31

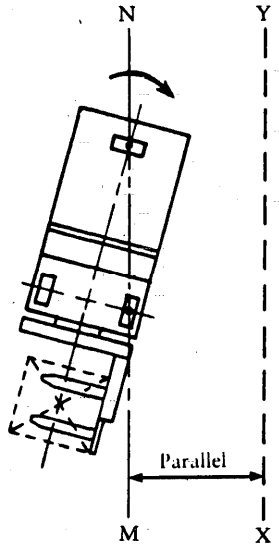

Figure 32

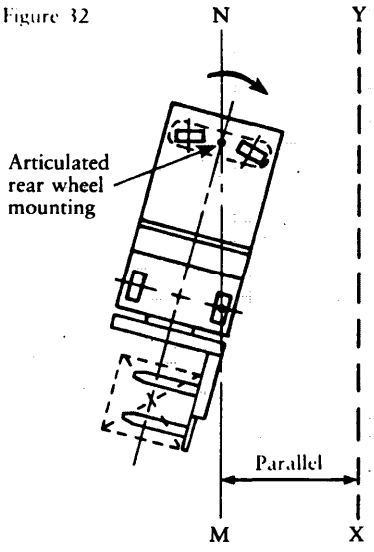

Figure 33

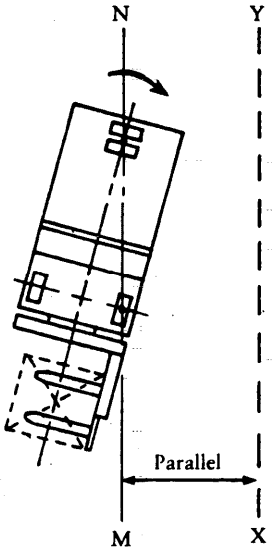

Figure 34

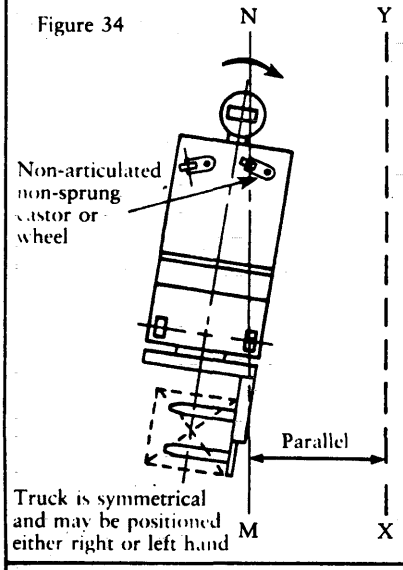

Figure 35

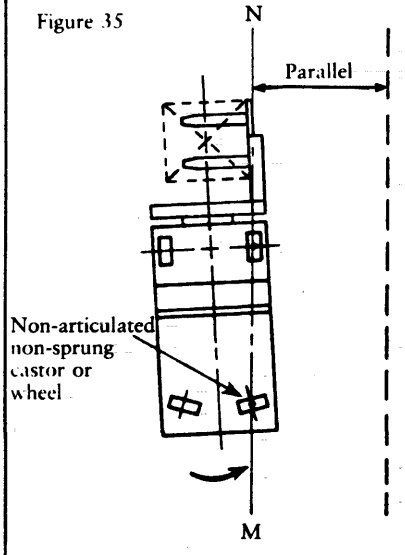

Figure 36

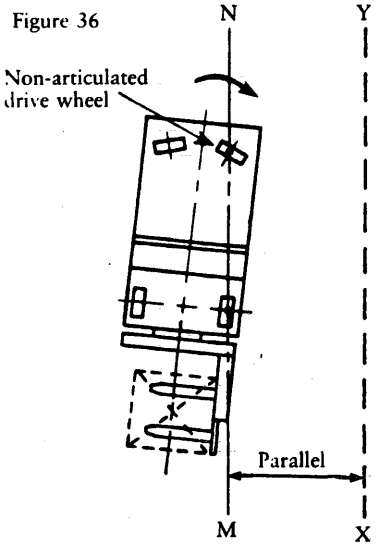

Figure 37

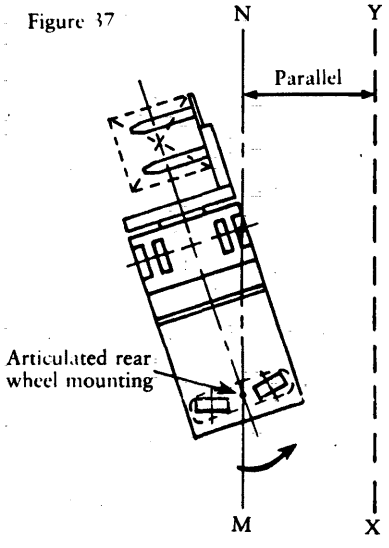

MN = truck axis or original tilt
XY = test platform tilt axis
Arrow = motion represented

Note

The truck wheel positions and general truck configurations in the diagrams are representative only and other arrangements are permissible provided the general principles relating to the test position are maintained.

Figure 38

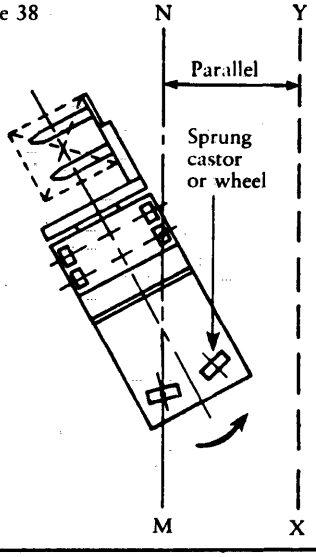

Test No 2

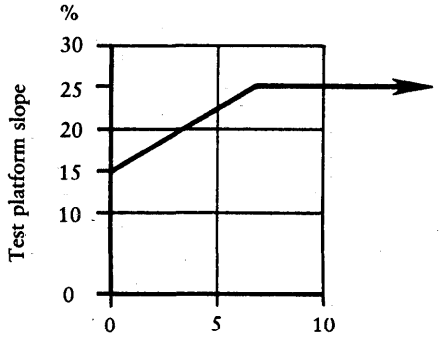

(15 + 1,55 v)% — max. 25%

v = maximum speed of truck in the operating aisles, in kilometres per hour, unladen, on smooth and level ground

v = km/h

Figure 39

Test No 11

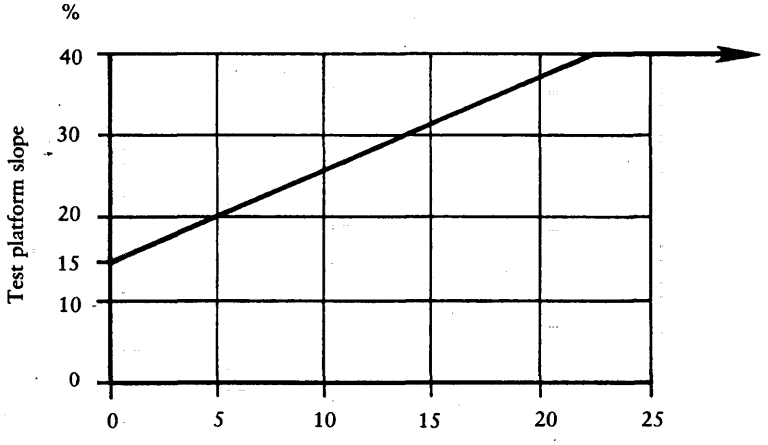

(15 + 1,1 v_0) % — max. 40%

v_0 = maximum speed of truck attainable outside the aisles, in kilometres per hour, unladen, on smooth and level ground (this may be automatically reduced from v_0 wich is the maximum speed of truck in the operating aisles)

v_0 = km/h

Figure 40

Test No 14

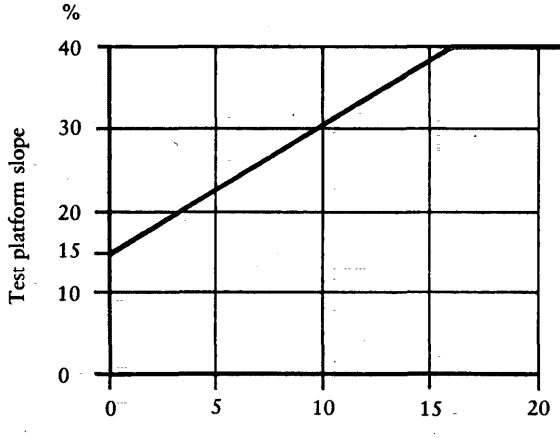

(15 + 1,55 v_0) % — max. 40%

v_0 = maximum speed of truck attainable outside the aisles, in kilometres per hour, unladen, on smooth and level ground (this may be automatically reduced from v_0 wich is the maximum speed of truck in the operating aisles)

v_0 = km/h

Figure 41

METHOD No 8

STABILITY TESTS FOR ROUGH TERRAIN TRUCKS

1. OBJECTIVE AND SCOPE

These requirements specify the basic tests for the verification of stability of rough terrain trucks up to and including 10 000 kg rated capacity with tiltable or non-tiltable mast or fork arms. It is applicable to trucks fitted with fork arms and/or attachments, but does not apply to trucks when adapted for use with suspended loads which may swing freely.

2. CONDITIONS OF VALIDITY

These requirements apply to trucks that have a fixed or articulated chassis construction and which may have optional equipment for the lateral slope correction of the chassis, mast or fork carrier.

The following stability tests in these requirements ensure that the type of truck specified has satisfactory stability when reasonably and appropriately used under normal operating conditions, namely:

(a) operating (travelling and stacking) on non-prepared ground;

(b) travelling with the mast or fork arms tilted backwards and the load in the lowered (travelling) position, including up and down gradients;

(c) stacking with the mast substantially vertical and the fork arms substantially horizontal;

(d) operating with the load centre of gravity approximately on the longitudinal centre plane of the truck.

Where operating conditions differ from normal, reference shall also be made to methods No 9, No 10 and No 11.

3. CONDITIONS OF TEST

3.1. Equipment and method

Stability shall be verified by means of the tests described hereafter using a test platform which can be tilted about one side.

The truck under test shall be placed on the platform, which is initially in the horizontal plane, sequentially in the positions described in the table of tests. For each of the truck positions, the platform shall be tilted slowly and smoothly to the slope indicated in the table. The truck is considered stable if it passes all the tests without overturning.

For the purpose of these tests, the overturning value of the test platform's slope is that which, if increased, would produce complete overturning of the truck. It is permissible in lateral tests for one of the load wheels to lose contact with the test platform.

3.2. Condition of the truck

3.2.1. *General*

The tests shall be carried out with the truck ready for use without operator (fuel tanks of engined trucks shall be full if stability is thereby reduced; all other tanks shall be filled to their correct operating levels). The load carrying means shall be fully equipped with any protective or supplementary lifting apparatus supplied as original equipment, and the mast or fork arms, if adjustable for tilt, shall be positioned in accordance with the table of tests. Where applicable, tyres shall be inflated to the pressures specified by the manufacturer, and where tyre ballast is permitted it shall be used in accordance with the manufacturer's instructions.

3.2.2. *Verification of the vertical position of the mast*

Before starting test No 1, the vertical position of the mast shall be verified by means of a plumb-line or other suitable equipment.

Projection onto the horizontal platform of the centre of gravity G (or any other point such as E having a fixed relationship to G) shall, at the selected test height, by the same as with the load lowered to the normal

travelling height. Deviations caused by deflection shall be corrected by varying the tilt of the mast within the limits imposed by the design of the truck.

This procedure does not apply to trucks where the design does not allow such corrections.

3.2.3. *Lift height for tests simulating travelling*

For tests simulating travelling, the upper face of the fork arms at the heels shall be positioned 500 mm from the ground.

3.2.4. *Lift height for tests simulating stacking*

For tests simulating stacking the lift height shall be measured between the surface of the tilting platform and the upper surface of the fork blade.

3.3. **Effect of the operator's weight on stability**

The operator on rider controlled trucks shall be represented by a weight (mass) of 90 kg if the stability during a test is thereby decreased. For a standing operator, the weight (mass) shall be secured with its centre of gravity 1 000 mm above the centre of the footplate at the control position. For a seated operator, the weight (mass) shall be secured with its centre of gravity 250 mm above the operator's seat in a compressed condition.

3.4. **Location of the truck on the test platform**

The specified position of the truck on the test platform shall be maintained during each test.

Wheel rotation shall be prevented by application of the handbrake, or service brakes, which may be secured in the 'on' position. Additionally, the wheels may be wedged against the truck frame but in such a way that any axle/frame articulation is not affected.

It is permissible to use chocks or blocks between the wheels and the test platform to prevent the truck sliding out of position. The height of the chocks or blocks shall not exceed 0,1 d (outside diameter (d) of the wheel).

Outside diameter (d) of the wheel	Maximum height of chocks or blocks
Up to 250 mm	25 mm
Over 250 mm	0,1 d

3.5. **Test load**

The test load shall be a weight (mass) equivalent to the rated load Q acting through a centre of gravity G, nominally positioned at the standard load centre distance D, horizontally from the face of the fork arm shank and vertically from the upper face of the fork arm blade (see figure 1).

The centre of gravity G shall be on the centre plane between the mast uprights, except where a lateral slope correction device is used on test 3.

Figure 1

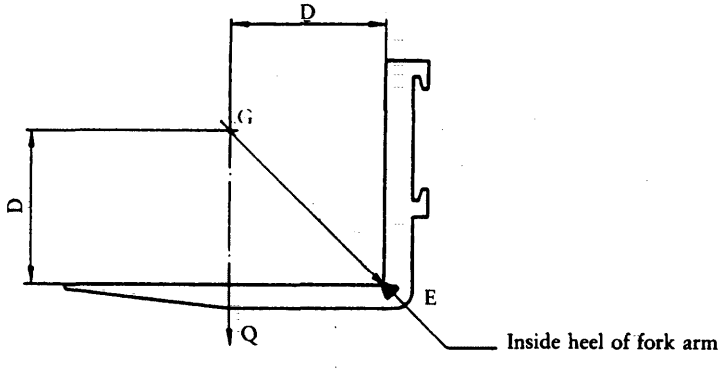

If the manufacturer shows other possible ratings, on the capacity plate tests shall be carried out with maximum load at the corresponding height as well as with the load corresponding to the maximum height.

3.6. **Safety precautions**

Precautions should be taken to prevent the overturning of the truck or the displacement of the test load during the tests.

Where lashings are used to prevent the truck overturning, they shall be sufficiently supple and arranged with sufficient slack so that no appreciable restriction is imposed on the truck until the overturning movement starts.

Displacement of the load may be prevented by means such as:

(a) firmly securing to the load carrier;

(b) suspending near the ground by a rope, chain etc., in such a manner that the upper end of the suspension means acts at the point G where the centre of gravity of a fixed test load would otherwise be located.

4. TEST PROCEDURE

The truck shall be positioned in accordance with the table of tests.

Lateral tests shall be conducted to the side to which the truck is least stable with a line through points MN of the truck parallel to the tilting axis XY of the platform.

Point N is the centre point of the area of contact between the platform surface and the load wheel nearest to the tilting axis XY (figures 8 and 9).

Point M is the vertical projection into the platform of the point of intersection between the centre plane AB of the rough terrain truck and the centre line of the rear axle (figures 8 and 9).

Test shall be conducted with stabilizers disengaged.

For test 3, lateral slope correction may be used to bring the lifting mechanism as close to vertical as possible on the tilted platform. For other tests, the lifting mechanism should be perpendicular to the test platform.

5. TESTS FOR TRUCKS FITTED WITH ATTACHMENTS

Trucks fitted with attachments shall be subjected to the foregoing stability tests, except where the attachment can bring the centre of gravity of the load out of the longitudinal centre plane of the truck (see method No 10).

The test load and its position shall be those specified on the capacity plate(s) of the truck fitted with the attachment and used in compliance with the instructions of the manufacturer.

The lift heights required in the tests shall be measured between the surface of the tilting platform and the underside of the load or attachment, whichever is the smaller.

	Tests for longitudinal stability		Tests for lateral stability	
Test No	1	2	3	4
Test of stability when	Stacking	Travelling	Stacking	Travelling
Test load	With	With	With	Without
Load centre distance	D of the load	D of the load	D of the load	—
Lift height	Maximum (see 3.5)	500 mm (see 3.2.3)	Maximum (see 3.5)	500 mm (see 3.2.3)
Tilt of mast or fork arms	Vertical (see 3.2.2)	Maximum backward tilt	(1)	Maximum backward tilt
Position on test platform	Figures 2 and 6 or 7	Figures 3 and 6 or 7	Figures 4 and 8 or 9	Figures 5 and 8 or 9
Test platform slope	7%	22%	12%	50%

(1) Maximum backward tilt, 10°, or 600 mm rear displacement of load centre of gravity, whichever is.

AB = longitudinal centre plane of truck
MN = truck axis of original tilt
XY = test platform tilt axis

Figure 2

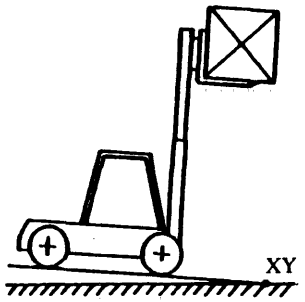

Figure 3

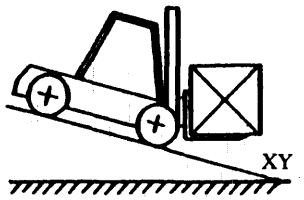

Figure 4

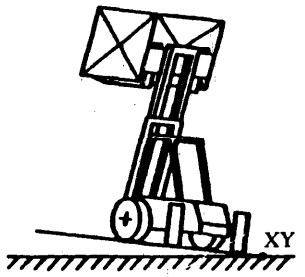

Figure 5

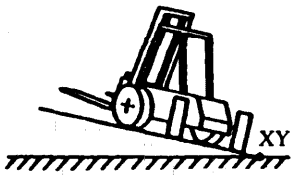

Figure 6

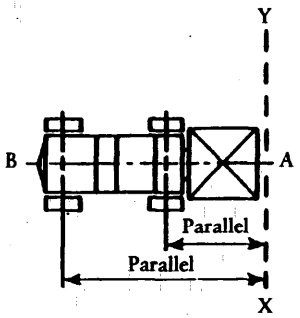

Figure 7

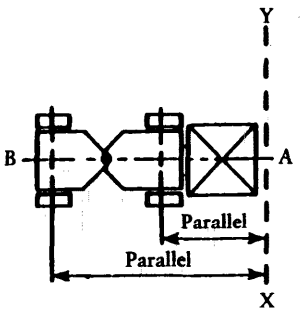

Figure 8

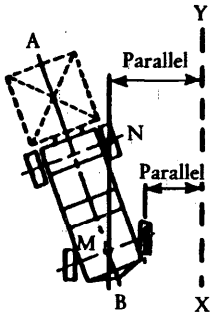

Figure 9

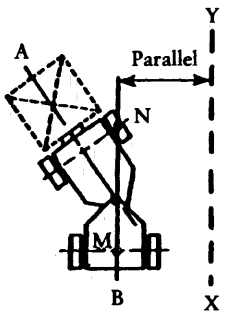

METHOD No 9

STABILITY TESTS FOR TRUCKS OPERATED WITH MASTS TILTED FORWARD

1. OBJECTIVE AND SCOPE

Other requirements specify the basic tests for the verification of stability under normal operating conditions. The definition of 'normal operating conditions' is contained in each relevant requirement.

This requirement specifies the additional test when operating conditions are not normal and it is necessary to operate a laden truck with the mast tilted forward (see figure 1).
This requirement does not apply to trucks when handling suspended loads which may swing freely.

Figure 1

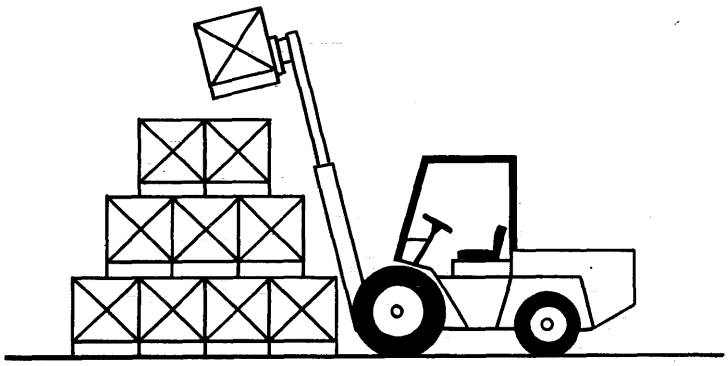

Special stacking

2. CONDITIONS OF VALIDITY

When a truck is to be used for stacking (depositing or retrieving a load) on level ground with the mast tilted forward and the load in the elevated position, a special purpose capacity rating shall be determined. The following stability test in these requirements ensures that the type of truck specified has satisfactory stability when reasonably and appropriately used within the special rating and conditions.

3. CONDITIONS OF TEST

3.1. Equipment and method

Stability shall be verified by means of the tests described hereafter using a test platform which can be tilted about one side.

The truck under test shall be placed on the platform, which is initially in the horizontal plane, in the position described in paragraph 4. The platform shall be tilted slowly and smoothly to the slope indicated for that position in the appropriate requirement. The truck is considered stable if it passes the test without overturning.

For the purpose of this test, the overturning value of the test platform's slope is that which, if increased, would produce complete overturning of the truck.

3.2. Condition of the truck

3.2.1. *Common conditions*

The tests shall be carried out with the truck ready for use without operator (fuel tanks of engined trucks shall be full if stability is thereby reduced; all other tanks shall be filled to their correct operating levels). The load-carrying means shall be fully equipped with any protective or supplementary lifting apparatus supplied as original equipment, and the mast or fork arms, if adjustable for tilt, shall be positioned in accordance with the table of tests. Where applicable, tyres shall be inflated to the pressures specified by the manufacturer, and where tyre ballast is permitted it shall be used in accordance with the manufacturer's instructions.

3.2.2. *Lift height for tests simulating stacking*

For tests simulating stacking the lift height shall be measured between the surface of the tilting platform and the upper surface of the fork blade.

3.3. **Effect of the operator's weight on stability**

The operator on rider controlled trucks shall be represented by a weight (mass) of 90 kg if the stability during a test is thereby decreased. For a standing operator, the weight (mass) shall be secured with its centre of gravity 1 000 mm above the centre of the footplate at the control position. For a seated operator, the weight (mass) shall be secured with its centre of gravity 250 mm above the operator's seat in a compressed condition.

3.4. **Location of the truck on the test platform**

The specified position of the truck on the test platform shall be maintained during the test.

Wheel rotation shall be prevented by application of the handbrake, or service brakes, which may be secured in the 'on' position. Additionally, the wheels may be wedged against the truck frame but in such a way that any axle/frame articulation is not affected.

It is permissible to use chocks or blocks between the wheels and the test platform to prevent the truck sliding out of position. The height of the chocks or blocks shall not exceed the values indicated in the following table:

Outside diameter (d) of the wheel	Maximum height of chocks or blocks
Up to 250 mm	25 mm
Over 250 mm	0,1 d

3.5. **Test load**

The test load shall be a weight (mass) equivalent to the rated load Q acting through a centre of gravity G, nominally positioned at he standard load centre distance D, horizontally from the face of the fork arm shank and vertically from the upper face of the fork arm blade (see figure 2).

The centre of gravity G shall be on the centre plane between the mast uprights.

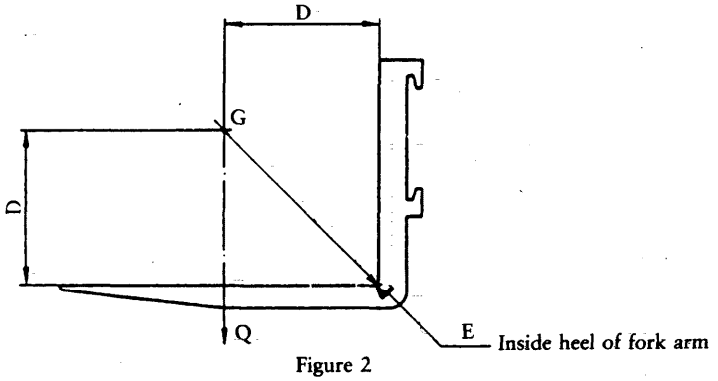

Figure 2

If the manufacturer shows other possible ratings, on the capacity plate tests shall be carried out with maximum load at the corresponding height as well as with the load corresponding to the maximum height.

3.6. **Safety precautions**

Precautions should be taken to prevent the overturning of the truck or the displacement of the test load during the test.

Where lashings are used to prevent the truck overturning, they shall be sufficiently supple and arranged with sufficient slack so that no appreciable restriction is imposed on the truck until the overturning movement starts.

Displacement of the load may be prevented by means such as:

(a) firmly securing to the load carrier;

(b) suspending near the ground by a rope, chain etc., in such a manner that the upper end of the suspension means acts at the point G where the centre of gravity of a fixed test load would otherwise be located.

4. TEST PROCEDURE

The truck shall be positioned on the platform as follows:

as for test 1 of Method No 1 for counterbalanced trucks
as for test 1 of Method No 2 for reach and straddle trucks
as for test 1 of Method No 3 for pallet stackers and high lidt platform trucks
as for test 1 of Method No 5 for single side loading trucks
as for test 1 of Method No 6 for for bi-and multi-directional trucks
as for test 1 of Method No 7 and No 8 (if applicable) for high lift lateral (and front) stacking trucks
as for test 1 of Method No 8 for rough terrain trucks.

The mast shall be tilted forward to the fullest extent permitted by the design and the load raised to the maximum elevation.

5. TESTS FOR TRUCKS FITTED WITH ATTACHMENTS

Trucks fitted with attachments shall be subjected to the foregoing stability tests, except where the attachment can bring the centre of gravity of the load out of the longitudinal centre plane of the truck (see Method No 10 etc.).

The test load and its position shall be those specified on the capacity plate(s) of the truck fitted with the attachment and used in compliance with the instructions of the manufacturer.

The lift heights required in the tests shall be measured between the surface of the tilting platform and the underside of the load or attachment, whichever is the smaller.

METHOD No 10

STABILITY TESTS FOR TRUCKS OPERATING WITH OFFSET LOAD — OFFSET BY POWERED DEVICES

1. OBJECTIVE AND SCOPE

Other requirements specify the basic tests for the verification of stability under normal operating conditions. The definition of 'normal operating conditions' is contained in each relevant requirement.

This requirement specifies the additional test when operating conditions are not normal and it is necessary to operate a laden truck fitted with a load-handling device such as a side shift, which may displace the load centre of gravity substantially from the longitudinal centre plane of the truck (see figure 1).

This requirement does not apply to trucks when handling suspended loads which may swing freely.

Figure 1

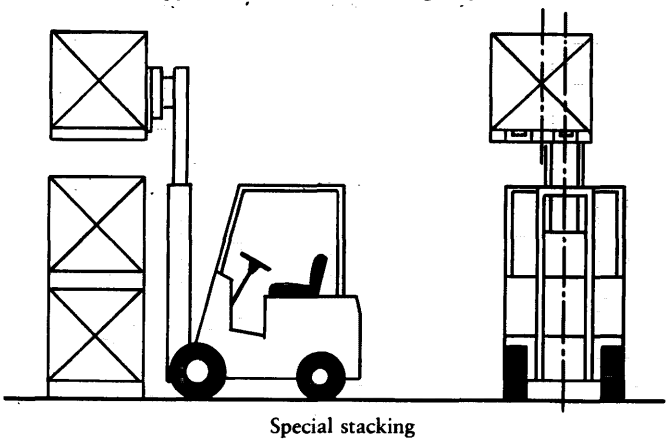

Special stacking

2. CONDITIONS OF VALIDITY

When a truck is to be used for stacking (depositing or retrieving a load) on level ground with the load centre of gravity substantially offset from the longitudinal centre plane of the truck by a load-handling device such as a side shift, which may positively displace the load a predetermined maximum amount, a special purpose capacity rating shall be determined.

A substantial offset is considered to be:

(a) more than 100 mm — for a truck with a rated capacity up to and including 6 300 kg;

(b) more than 150 mm — for a truck with a rated capacity up to and including 10 000 kg.

The following stability test in these requirements ensures that the type of truck specified has satisfactory stability when reasonably and appropriately used within the special rating and conditions.

3. CONDITIONS OF TEST

3.1. Equipment and method

Stability shall be verified by means of the test described hereafter using a test platform which can be tilted about one side.

The truck under test shall be placed on the platform, which is initially in the horizontal plane, in the position described in paragraph 4. The platform shall be tilted slowly and smoothly to the slope indicated for that position in the appropriate requirement. The truck is considered stable if it passes the test without overturning.

For the purpose of this test, the overturning value of the test platform's slope is that which, if increased, would produce complete overturning of the truck. It is permissible in the test for one of the load wheels to lose contact with the test platform, and it is acceptable for parts of the structure or other designed features to make contact with the test platform.

3.2. Condition of the truck

The test shall be carried out with the truck ready for use without operator (fuel tanks of engined trucks shall be full if stability is thereby reduced; all other tanks shall be filled to their correct operating levels). The load-carrying means shall be fully equipped with any protective or supplementary lifting apparatus supplied as original equipment. Where applicable, tyres shall be inflated to the pressures specified by the manufacturer, and where tyre ballast is permitted it shall be used in accordance with the manufacturer's instructions.

3.3. **Effect of the operator's weight on stability**

The operator on rider controlled trucks shall be represented by a weight (mass) of 90 kg if the stability during the test is thereby decreased. For a standing operator, the weight (mass) shall be secured with its centre of gravity 1 000 mm above the centre of the footplate at the control position. For a seated operator, the weight (mass) shall be secured with its centre of gravity 250 mm above the operator's seat in a compressed condition.

3.4. **Location of the truck on the test platform**

The specified position of the truck on the test platform shall be maintained during the test.

Wheel rotation shall be prevented by application of the handbrake, or service brakes, which may be secured in the 'on' position. Additionally, the wheels may be wedged against the truck frame but in such a way that any axle/frame articulation is not affected.

It is permissible to use chocks or blocks between the wheels and the test platform to prevent the truck sliding out of position. The height of the chocks or blocks shall not exceed the values indicated in the following table:

Outside diameter (d) of the wheel	Maximum height of chocks or blocks
Up to 250 mm	25 mm
Over 250 mm	0,1 d

3.5. **Test load**

The test load shall be a weight (mass) equivalent to the rated load Q_s acting through a centre of gravity G, nominally positioned at he standard load centre distance D, horizontally from the front face of the fork arm shank and vertically from the upper face of the fork arm blade (see fig. 2).

The centre of gravity G shall be offset laterally by the maximum amount that it is anticipated will be encountered in actual operation.

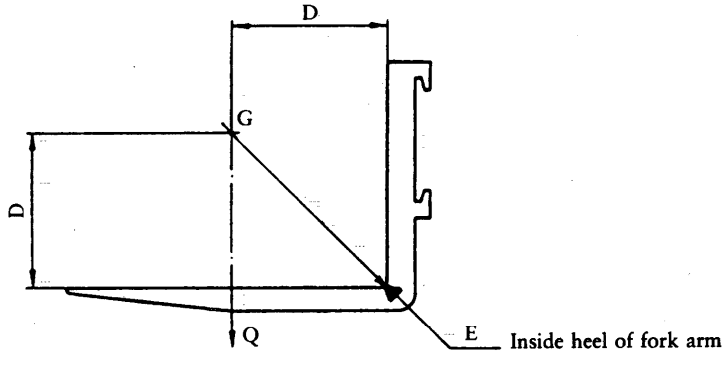

Figure 2

If the manufacturer shows other possible ratings, on the capacity plate tests shall be carried out with maximum load at the corresponding height as well as with the load corresponding to the maximum height.

3.6. **Safety precautions**

Precautions should be taken to prevent the overturning of the truck or the displacement of the test load during the test.

Where lashings are used to prevent the truck overturning, they shall be sufficiently supple and arranged with sufficient slack so that no appreciable restriction is imposed on the truck until the overturning movement starts.

Displacement of the test load may be prevented by means such as:

(a) firmly securing to the load carrier;

(b) suspending near the ground by a rope, chain etc., in such a manner that the upper end of the suspension means acts at the point G where the centre of gravity of a fixed test load would otherwise be located.

4. TEST PROCEDURE

The truck shall be positioned on the platform as follows:

as for test 3 of Method No 1 for counterbalanced trucks

as for test 3 of Method No 2 for reach and straddle trucks

as for test 3 of Method No 3 for pallet stackers and high lift platform trucks

as for test 8 of Method No 6 for bi-and multi-directional trucks

as for test 3 of Method No 8 for rough terrain trucks.

The test shall be conducted to the side to which the truck is least stable.

The mast shall be retracted and tilted fully rearward where the design permits.

The load, shall be raised to the maximum elevation (see 3.5).

5. TESTS FOR TRUCKS FITTED WITH ATTACHMENTS

Trucks fitted with attachments shall be subjected to the foregoing special stability test, where appropriate.

The test load and its position shall be those specified on the capacity plate(s) of the truck fitted with the attachment and used under special conditions in compliance with the instructions of the manufacturer.

The lift heights required in the tests shall be measured between the surface of the tilting platform and the underside of the load or attachment, whichever is the smaller.

METHOD No 11

STABILITY TESTS FOR TRUCKS OPERATING WITH OFFSET LOAD — OFFSET DETERMINED BY THE UTILIZATION

1. OBJECTIVE AND SCOPE

Other requirements specify the basic tests for the verification of stability under normal operating conditions. The definition of 'normal operating conditions' is contained in each relevant requirement.

This requirement specifies the additional test when operating conditions are not normal and it is necessary to operate a laden truck with the load centre of gravity substantially offset from the longitudinal centre plane of the truck (see figure 1).

This requirement does not apply to trucks when handling suspended loads which may swing freely.

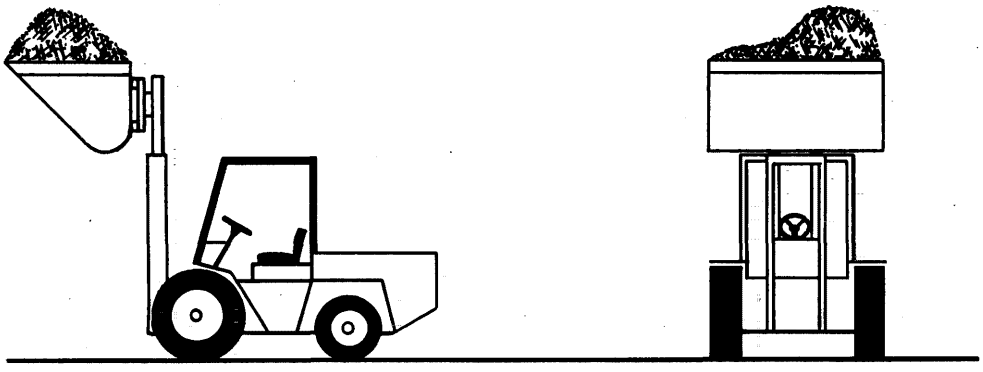

Figure 1

2. CONDITIONS OF VALIDITY

When a truck is to be used for stacking (depositing or retrieving a load) on level ground with the load centre of gravity substantially offset from the longitudinal centre plane of the truck by an indeterminate amount caused either by the nature of the load being handled, or by the load-handling device employed, a special purpose capacity rating shall be determined.

A substantial offset is considered to be:

(a) more than 100 mm — for a truck with a rated capacity up to and including 6 300 kg;

(b) more than 150 mm — for a truck with a rated capacity up to and including 10 000 kg.

The following stability test in these requirements ensures that the type of truck specified has satisfactory stability when reasonably and appropriately used within the special rating and conditions.

3. CONDITIONS OF TEST

3.1. Equipment and method

Stability shall be verified by means of the test described hereafter using a test platform which can be tilted about one side.

The truck under test shall be placed on the platform, which is initially in the horizontal plane, in the position described in paragraph 4. The platform shall be tilted slowly and smoothly to the slope indicated for that position in the appropriate requirement. The truck is considered stable if it passes the test without overturning.

For the purpose of this test, the overturning value of the test platform's slope is that which, if increased, would produce complete overturning of the truck. It is permissible in the test for one of the load wheels to lose contact with the test platform, and it is acceptable for parts of the structure or other designed features to make contact with the test platform.

3.2. Condition of the truck

The tests shall be carried out with the truck ready for use without operator (fuel tanks of engined trucks shall be full if stability is thereby reduced; all other tanks shall be filled to their correct operating levels). The load carrying means shall be fully equipped with any protective or supplementary lifting apparatus supplied as original equipment. Where applicable, tyres shall be inflated to the pressures specified by the manufacturer, and where tyre ballast is permitted it shall be used in accordance with the manufacturer's instructions.

3.3. **Effect of the operator's weight on stability**

The operator on rider controlled trucks shall be represented by a weight (mass) of 90 kg if the stability during a test is thereby decreased. For a standing operator, the weight (mass) shall be secured with its centre of gravity 1 000 mm above the centre of the footplate at the control position. For a seated operator, the weight (mass) shall be secured with its centre of gravity 250 mm above the operator's seat in a compressed condition.

3.4. **Location of the truck on the test platform**

The specified position of the truck on the test platform shall be maintained during the test.

Wheel rotation shall be prevented by application of the handbrake, or service brakes, which may be secured in the 'on' position. Additionally, the wheels may be wedged against the truck frame but in such a way that any axle/frame articulation is not affected.

It is permissible to use chocks or blocks between the wheels and the test platform to prevent the truck sliding out of position. The height of the chocks or blocks shall not exceed the values indicated in the following table:

Outside diameter (d) of the wheel	Maximum height of chocks or blocks
Up to 250 mm	25 mm
Over 250 mm	0,1 d

3.5. **Test load**

The test load shall be a weight (mass) equivalent to the rated load Q_s acting through a centre of gravity G, nominally positioned at he standard load centre distance D, horizontally from the face of the fork arm shank and vertically from the upper face of the fork arm blade (see figure 2).

The centre of gravity G shall be offset laterally by the maximum amount that it is anticipated will be encountered in actual operation.

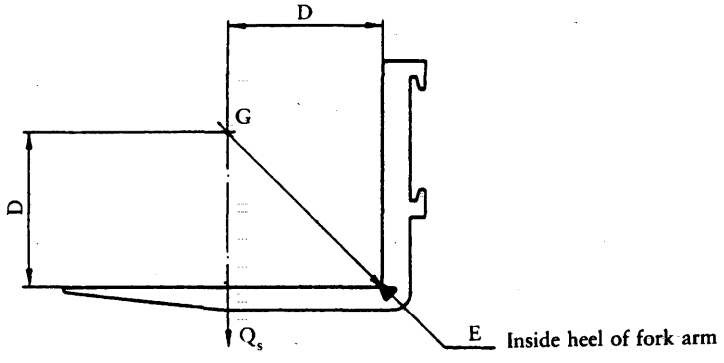

Figure 2

If the manufacturer shows other possible ratings, on the capacity plate tests shall be carried out with maximum load at the corresponding height as well as with the load corresponding to the maximum height as agreed between the interested parties.

3.6. **Safety precautions**

Precautions should be taken to prevent the overturning of the truck or the displacement of the test load during the test.

Where lashings are used to prevent the truck overturning, they shall be sufficiently supple and arranged with sufficient slack so that no appreciable restriction is imposed on the truck until the overturning movement starts.

Displacement of the load may be prevented by means such as:

(a) firmly securing to the load carrier;

(b) suspending near the ground by a rope, chain etc., in such a manner that the upper end of the suspension means acts at the point G where the centre of gravity of a fixed test load would otherwise be located.

4. TEST PROCEDURE

The truck shall be positioned on the platform as follows:

as for test 3 of Method No 1 for counterbalanced trucks

as for test 3 of Method No 2 for reach and straddle trucks

as for test 3 of Method No 3 for pallet stackers and high lift platform trucks

as for test 8 of Method No 6 for for bi- and multi-directional trucks

as for test 3 of Method No 8 for rough terrain trucks.

The test shall be conducted to the side to which the truck is least stable.

The mast shall be retracted and tilted fully rearward where the design permits.

The load shall be raised to the maximum elevation (see 3.5).

5. TESTS FOR TRUCKS FITTED WITH ATTACHMENTS

Trucks fitted with attachments shall be subjected to the foregoing special stability test, where appropriate.

The test load and its position shall be those specified on the capacity plate(s) of the truck fitted with the attachment and used under special conditions in compliance with the instructions of the manufacturer.

The lift heights required in the tests shall be measured between the surface of the tilting platform and the underside of the load or attachment, whichever is the smaller.

METHOD No 12

FUNCTIONAL TESTS FOR POWERED INDUSTRIAL TRUCKS

1. SCOPE

This requirement specifies functional tests to verify that industrial trucks are able to perform the tasks for which they are designed. Tests include two inspections and four dynamic tests.

2. PRE-TESTING INSPECTION

Each truck shall be checked to ensure that travel, braking and load controls are properly identified and function correctly. Horn, safety switches and lights (if fitted) shall be checked for correct operation. Identification and capacity plates for the truck, battery (for battery electric powered trucks) and attachment (if fitted) shall be examined to determine that they contain the correct information in accordance with Section 9.1 of Annex 1 to Directive 86/663/EEC and are relevant to the particular truck.

3. DYNAMIC TESTS

The following tests are to be carried out on each truck using loads as follows:

Q1: maximum load at the standardized load centre distance and at standard height where applicable, as specified on the capacity plate;

Q2: maximum load at the standardized load centre distance and at the maximum height, as specified on the capacity plate.

During the performance of the tests, the truck shall be operated by a competent person in accordance with the manufacturer's instructions as set out in section 11 of Annex I to Directive 86/663/EEC.

Testing may be performed by operating the truck in the manner prescribed below or where practicable may be simulated by any method giving an equivalent effect and producing substantially the same results.

3.1. **Mobility (travelling and manoeuvring) test**

This test shall be carried out without a load for tractors, but with load Q1 for all other types. The following procedure shall be followed:

3.1.1. Pick up the test load (where applicable), raise it to a height of about 300 mm or the maximum when less then 300 mm, and where applicable, tilt back to the maximum amount for travelling as recommended by the manufacturer.

3.1.2. Move forward at low speed, change to reverse, and change to forward again to verify that the direction change mechanism operates effectively. Reversal of direction changes are to be made at the speeds recommended by the manufacturer.

3.1.3. Drive the truck forward and rearward through all speed ranges to the maximum speed, and check that range changing and service brakes operate in both directions.

3.1.4. Make several turns in both forward and reverse directions, and in the case of multi- and bi-directional trucks, both lateral directions, at approximately one third maximum speed and approximately one third maximum speed and approximately three times the minimum turning radius specified by the manufacturer. Check that steering is in the correct sense and operates satisfactorily.

3.1.5. Deposit the load on the ground.

3.2. **Stacking test** (excluding non-lifting and low-lift trucks)

This test shall be carried out with load Q2. Pick up the test load from ground level, elevate it to maximum height, and for stacking trucks deposit it on a stack or in a rack. Then destack, lower to ground level at maximum speed, making several stops during descent. There shall be no defects in any of the truck's operations.

3.3. **Maximum lowering speed test** (excluding non-lifting and low-lift trucks)

With the mast vertical, the maximum lowering speed shall be measured with loads Q1 and Q2 to verify that it does not exceed 0,6 m per second. This may be determined by dividing the total lowering distance in metres by the number of seconds required for the total descent.

3.4. **Lift and tilt leakage test**

With the mast vertical, the load Q1 shall be raised to a height of 2,5 m or load Q2 at the maximum height if less than 2,5 m. After 10 minutes, the load shall not have dropped more than 100 mm and the mast shall not have tilted forward by more than 5°. For trucks having less than 5° forward tilt, the tilting speed shall not exceed 1/2° per minute. For the purposes of this test, the truck may be secured against overturning.

4. POST-TESTING INSPECTION

Following these tests, the truck shall be examined to ensure that there are no defects.

METHOD No 13

METHOD OF MEASURING VISIBILITY OF POWERED INDUSTRIAL TRUCKS: COUNTERBALANCED FORK LIFT

1. PURPOSE

This requirement specifies a method of determining if the visibility of counterbalanced fork lift trucks is satisfactory. The method relates to travelling unladen in the direction of the fork arms.

2. SCOPE

This requirement applies to counterbalanced fork lift trucks complying with all the following specifications:

— sit-on with non-elevating operator facing the fork arms,

— front loading with non-retractable, non-side-shifting mast and fork arms,

— without side-shift or any attachment,

— rated capacity not exceeding 10 000 kg.

3. TEST EQUIPMENT

3.1 Light source apparatus. A single horizontal row of nine lamps (e.g. 55 w halogen) spaced on 37,5 mm centres. The lamps shall be arranged symmetrically on a line perpendicular to the direction of travel at a height of 650 mm above and 20 mm forward of the truck seat index point (see figure 4). Provision shall be made to switch off all but the two lamps 37,5 mm either side of the seat index point. Provision shall also be made to move the lamps horizontally up to 170 mm forward of the seat index point. A black shield shall be provided behind the row of lamps to assure maximum shadow definition on the test surface (see figure 1).

3.2 Test surface. A flat vertical area light in colour divided into 100 mm squares, and having a height from the floor to 650 mm above the seat index point and a width 3 metres greater than maximum truck width (see figure 2).

4. TEST ARRANGEMENT

The test shall be carried out on a substantially level surface. The mast shall be substantially vertical. For any specific truck, the upper load-carrying surfaces of the fork arms shall be 100 to 300 mm above the floor, and within this range, the manufacturer shall indicate the height at which all the tests must be carried out. The height shall be the same for all tests, and shall be stated in the test report. The fork arms shall be 1 200 mm long, and shall be positioned symmetrically on the fork carrier, as near to 800 mm outside spacing as possible for trucks less than 5 000 kg capacity, or 1 100 mm for trucks from 5 000 to 10 000 kg capacity. The seat and controls, if adjustable, shall face the fork arms and be placed as near as possible to the midpoint of their adjustment. The test surface shall be located four metres away from the front face of the fork carrier and shall be perpendicular to and symmetrical about the longitudinal axis of the truck. The test site must be dark enough to allow recognition of shadows (see figure 3).

5. TEST PROCEDURE

5.1 With two lamps switched on (see 3.1), observe the test surface area of truck width plus 500 mm each side, up to a height of 350 mm above the seat index point.

5.2 With nine lamps switched on:

5.2.1 observe the entire test surface area;

5.2.2 observe the upper load-carrying surfaces of the fork arms. The lamps may be moved up to 170 mm forward of the seat index point (see figure 1).

5.3 In all three tests, record areas of dark shadow, e.g.: in writing, by drawing or by photographs. A dark shadow area is that which has no direct light from any of the lamps. All other areas are defined as illuminated.

6. INTERPRETATION OF RESULTS

Visibility is satisfactory if all the following conditions are fulfilled:

6.1 For the test described in 5.1 in the area between the contiguous dark shadows cast by the vertical mast channels and adjacent members (e.g.: cylinders and chains), there shall be:

6.1.1 nor more than 50 % dark shadow;

6.1.2 no dark shadow connecting the dark shadows cast by the vertical mast channels and adjacent members from 150 mm below to 350 mm above the seat index point.

6.2 For the test described in 5.2.1 there shall be no more than 80 % dark shadow in any 500 mm × 500 mm area. Illuminated areas with a horizontal width of less than 50 mm shall be counted as dark shadow.

6.3 For the test described in 5.2.2, it suffices if of the forward half of one of the fork arms, 25 % of the upper load-carrying surface is illuminated.

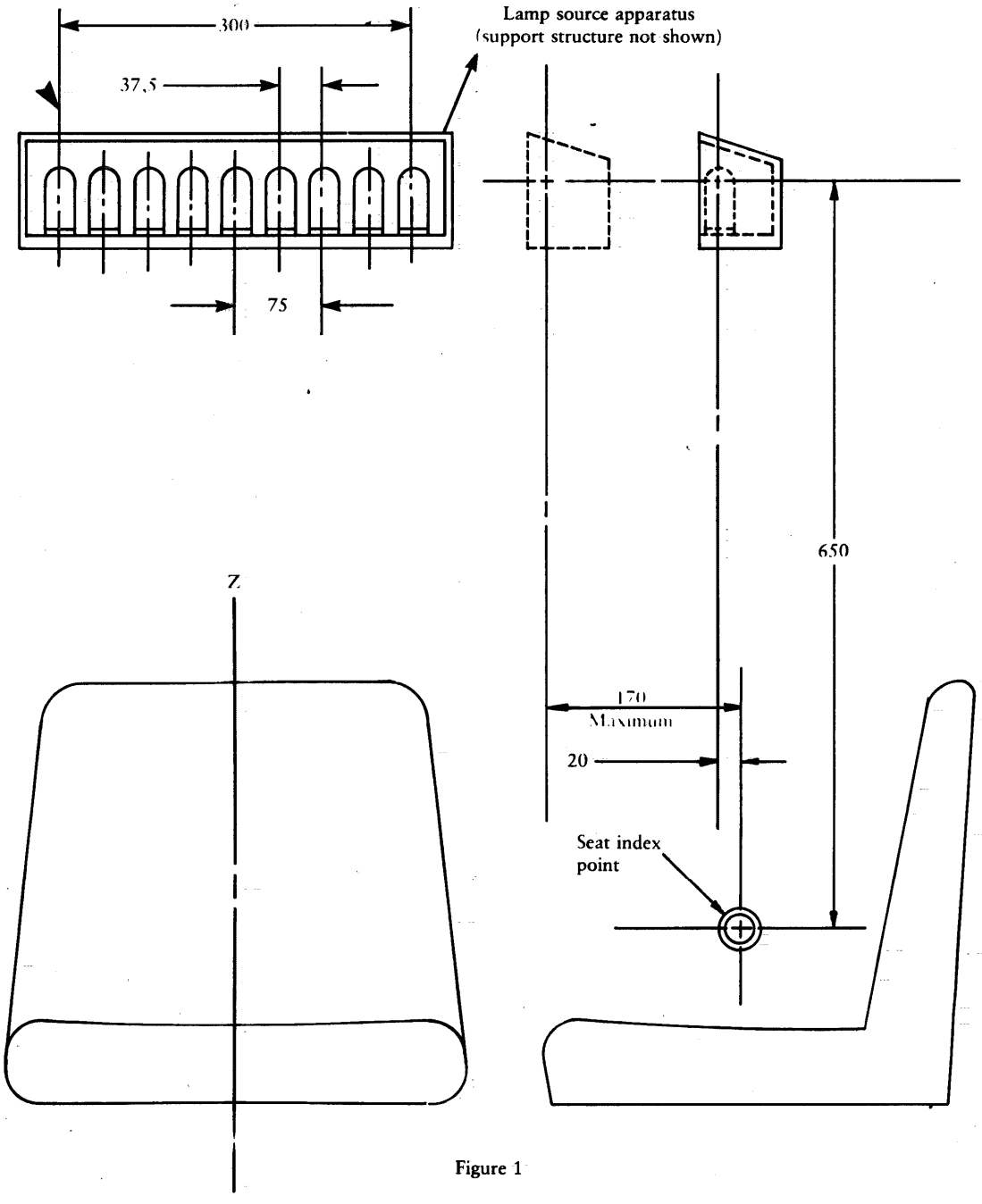
300
37,5
75
Lamp source apparatus
(support structure not shown)
650
Z
170
Maximum
20
Seat index
point

Figure 1

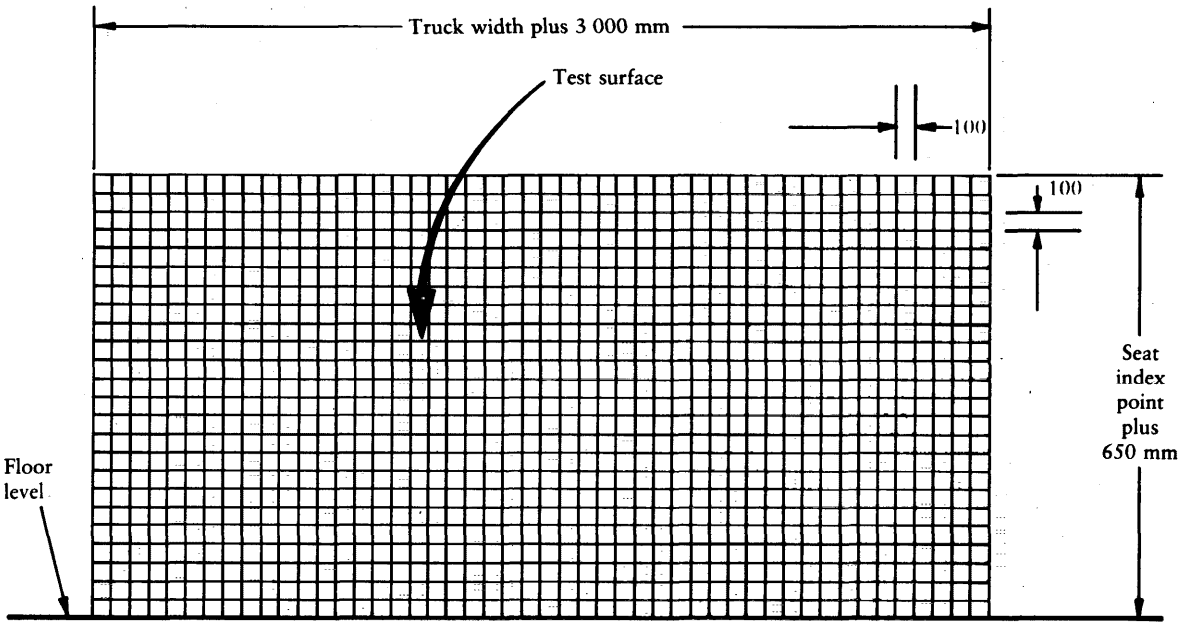

Figure 2

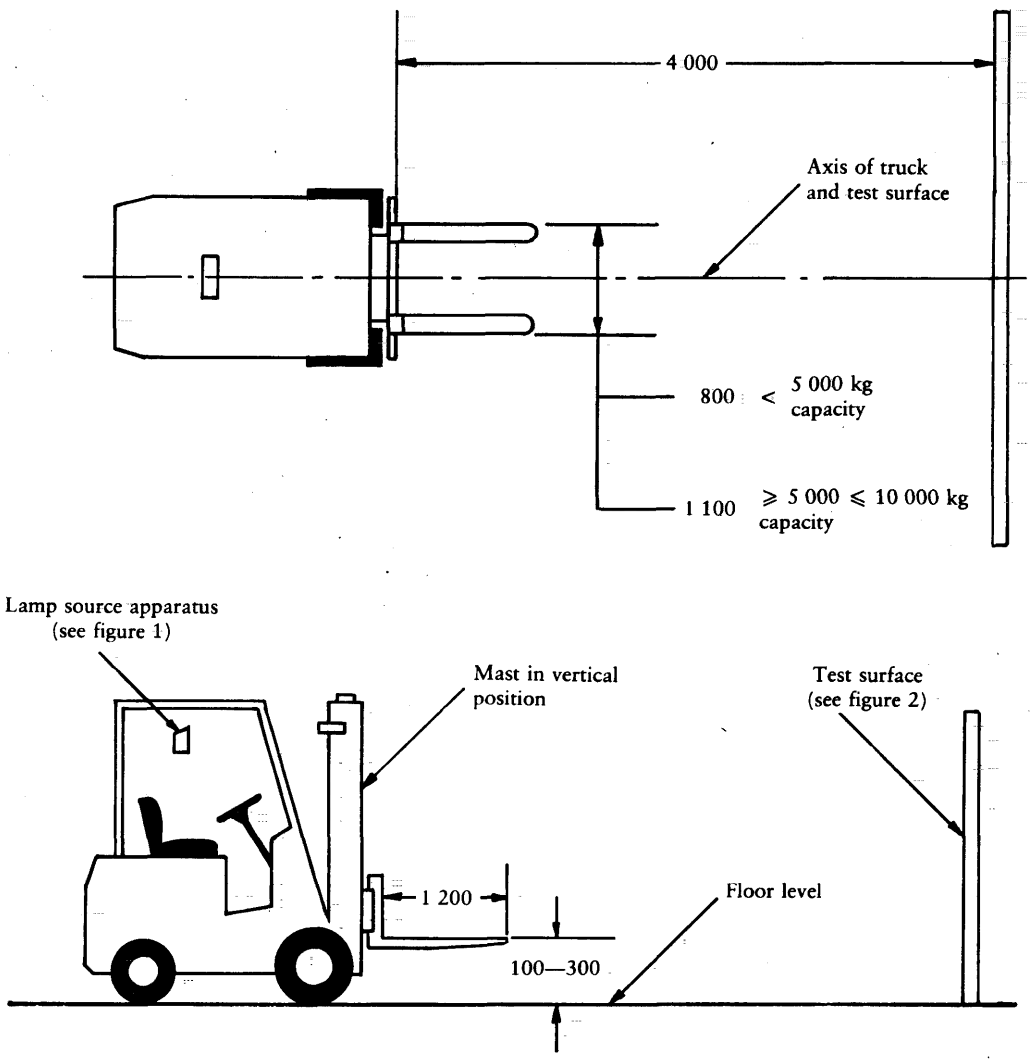

Figure 3

Seat index point measuring device
(Reference ISO 5353 — 1978)

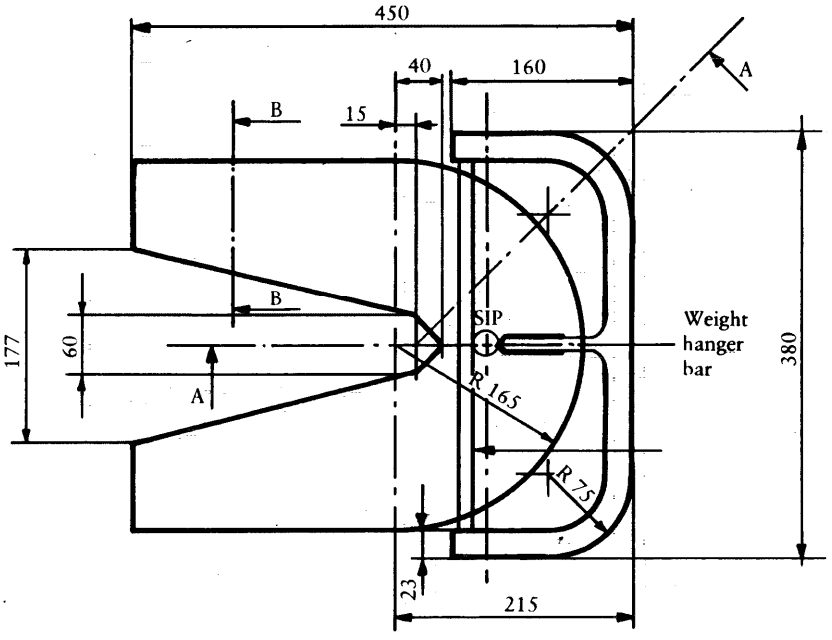

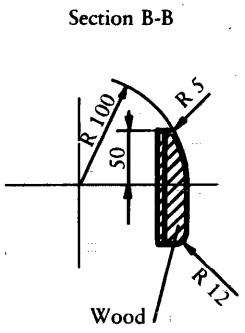

(Dimensions in millimetres)

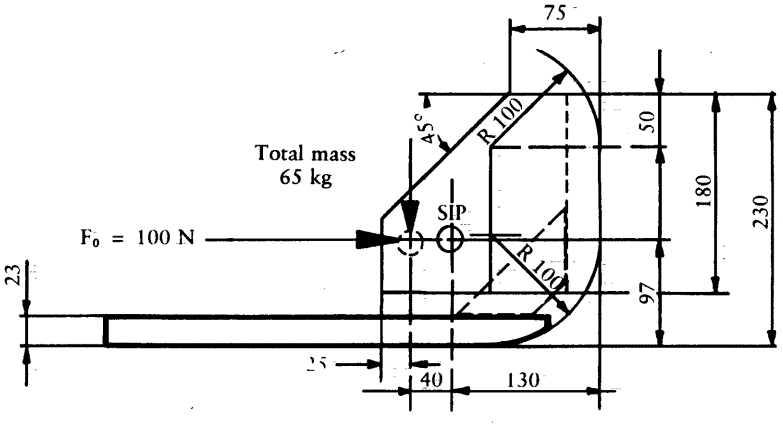

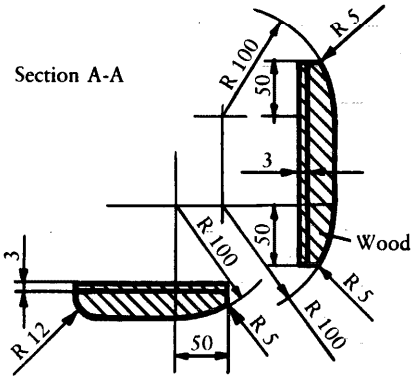

Figure 4